嘉尼企業股份有限公司CANAL ELECTRONIC CO.,LTD.

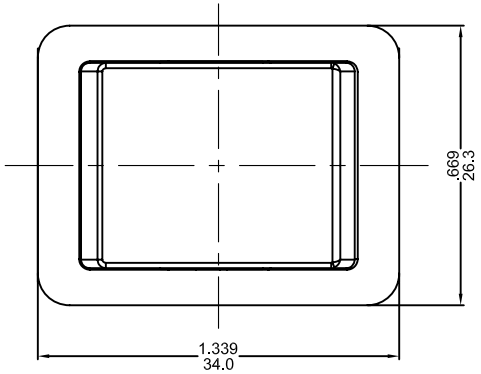

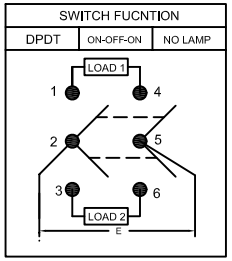

ROCKER SWITCH MODEL: X7 SERIES

RATING: 16(8)A 125/250V ~(cURus)
DIELECTRIC WITHSTAND VOLTAGE: 1500VAC 1 MINUTE
INSULATION RESISTANCE: 500VDC 100M Ω (MIN)
CONTACT RESISTANCE: 20m Ω INITIAL (MAX.)
WATERPROOF GRADE:IP67

嘉尼工程
2019.10.28
文件管制章

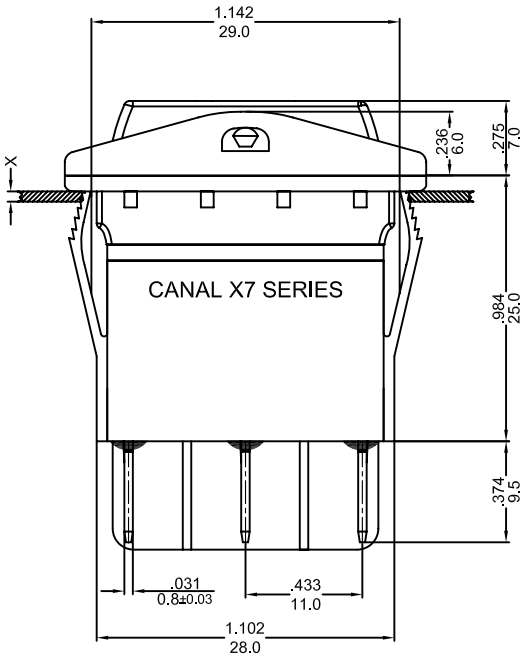

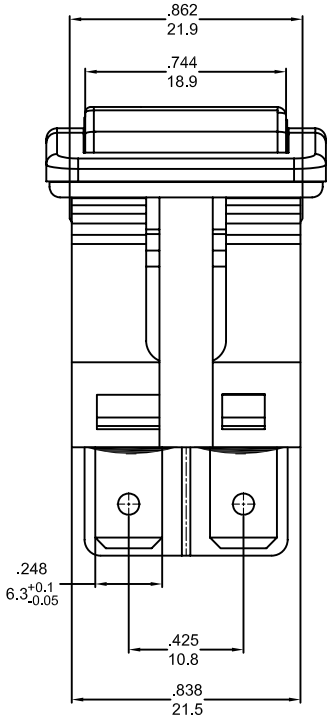

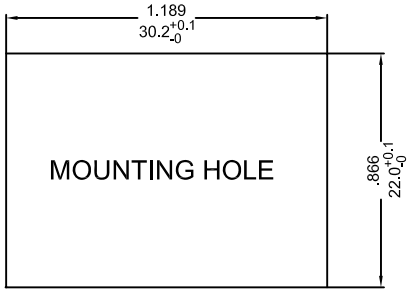

X=(0.8~3.0mm)
PANEL THICKNESS

NOTE: TOLERANCES UNLESS OTHERWISE SPECIFIED:± .012/0.3 (in/mm)

REVISION	DESCRIPTION	REVISED BY	TOLERANCES				ANGLE ½°	UNIT	mm	PART NAME	X7 SPEC DRAWING	DWG NO
4			DRAWN BY	达志各	DESIGNED BY	蔡劍	SCALE	3/2				S7736B
3												
2 2019.10.28	修正RATING	达志各	CHECKED BY		APPROVED BY		DATE	2019.03.27		PART NO	X7-230F2N-NBBA-1NWC	
1 2019.03.27	首次出圖	达志各										