嘉尼企業股份有限公司 CANAL ELECTRONIC CO.,LTD.

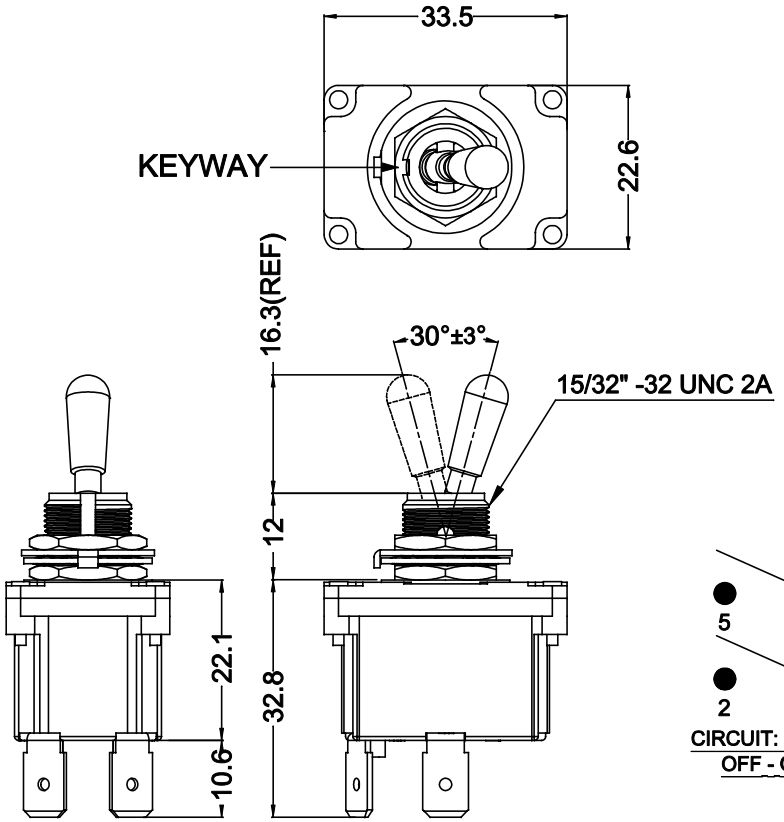

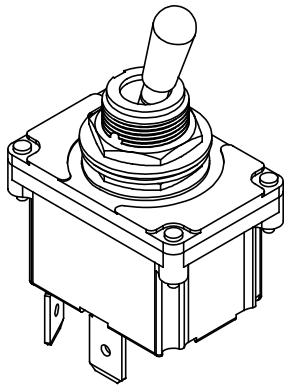

SPECIFICATION MODEL : TB SERIES

Electrical Life Life :10,000 cycles (cURus/ENEC15)
Mechanical Life: 50,000 cycles
Contact resistance: 20mΩ Inital (MAX),
Insulation resistance: 500VDC - 100MΩ (MIN).
Dielectric Strength:
(1) 1500VAC For 1 minute (Terminal to Enclouse)
(2) 500VAC For 1 minute (Terminal to Terminal)
Rating & ingress protection:reference to table

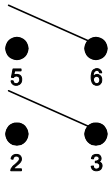

CIRCUIT: DPST
OFF - ON

SWITCH FUNCTION	
OFF	ON
OFF	2-3 5-6

#	Rating	IP
A	16(8)A 125/250~ T55	68
B	20(8)A 125/250~ T55	68
C	16A 6~30VDC T55	68
D	20A 6~30VDC T55	68
1	16(8)A 125/250~ T125/55	40
2	20(8)A 125/250~ T125/55	40
3	16A 6~30VDC T125/55	40
4	20A 6~30VDC T125/55	40

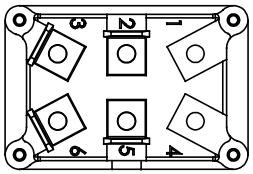

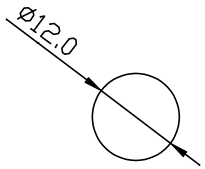

MOUNTING HOLE

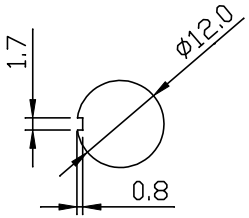

WITH KEYWAY

嘉尼企業股份有限公司
工程部
2022.12.16
文件管制章

NOTE: TOLERANCES UNLESS OTHERWISE SPECIFIED : ± .02 / 0.5 (mm).

REVISION	DESCRIPTION	REVISED BY	TOLERANCES X.X:			ANGLE ½°		UNIT	mm	PART NAME	SPEC DRAWING	DWG NO
4			DRAWN BY	范修銓	DESIGNED BY	范修銓	SCALE	1/1				WS5214A
3												
2			CHECKED BY	ERIC	APPROVED BY		DATE	2022.09.19		PART NO	TB4-#B12-1	
1 2022.09.19	首次出圖	范修銓										