佳尼有限公司 CANAL COMPONENTS INC

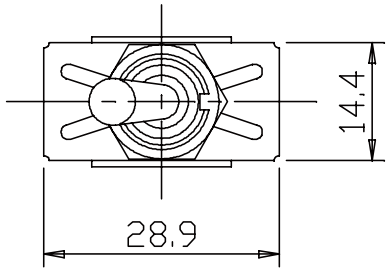

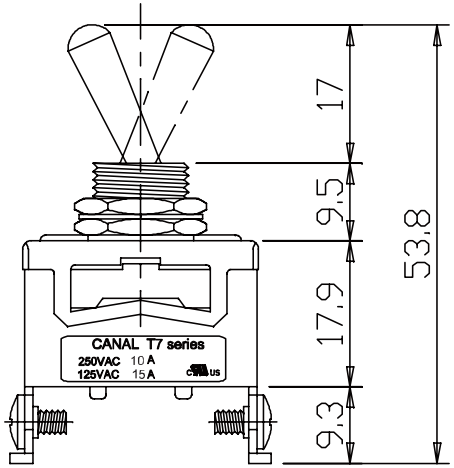

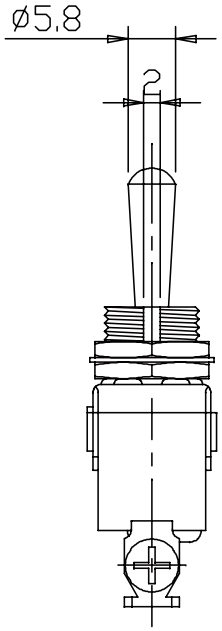

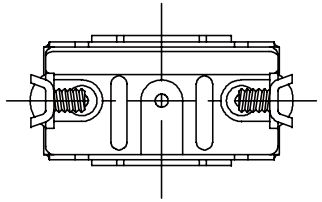

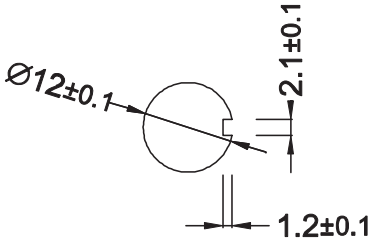

Mounting Hole

Termination Options

H1	H2	H3	H4	H5

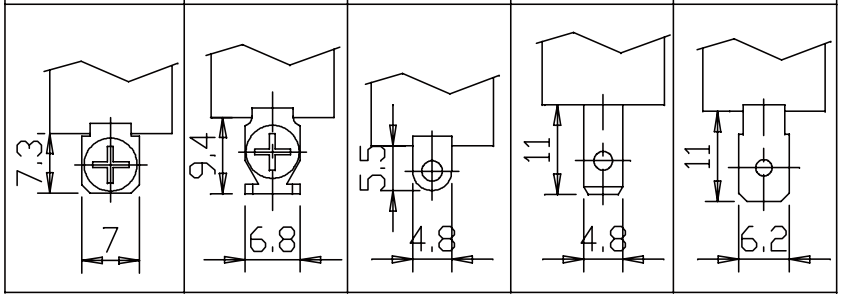

NO. POLES	MODEL NO.	SWITCH FUNCTION POS.1	SWITCH FUNCTION POS.1	SWITCH FUNCTION POS.1	TERMINAL QUANTITY	CONNETED TERMINALS POS.1	CONNETED TERMINALS POS.1	CONNETED TERMINALS POS.1
SPST	T7A11	ON	NONE	OFF	2P	1-3	—	—

SPECIFICATION

1.PATING:15A 125VAC,10A 250VAC (UL , CUL)

2.INSULATION RESISTANCE:DC 500V 200MΩ OR MORE

3.CONTACT RESISTANCF:DC 2-4V 1A 20mΩ OR LESS

4.WITHSTAND VOLTAGE:AC 1500V OR MORE

NOTE: TOLERANCES UNLESS OTHERWISE SPECIFIED : ± $^{.012}_{0.3}$ (mm).

REVISION	DESCRIPION	REVISED BY	TOLEANCES .X .XX ANGLE ½°				UNIT mm	PART NAME	SPEC DRAWING	DWG NO
4			DRAWN BY	張俊雄	DESIGNED BY	王豐文	SCALE			WS2831B
3										
2 2017.09.26	增加Mounting Hole 尺寸	張俊雄	CHECKED BY	Jimmy	APPROVED BY		DATE	2015.08.19	PART NO	T7A11A3B2##R
1 2015.08.19	首次出圖	張俊雄								