Home - Fischerelektronik - SK 483

fischerelektronik.de/web_fischer/en_GB/VA/SK48350SA/datasheet.xhtml

Data sheet Product SK 483 50 SA

- Print data sheet
- Recommend page

Profile heatsinks and liquid coolers>Extruded heatsinks for lock-in retaining spring

57 x 28 mm, for THFU 1-4+6+7, profile threads

Features

width:	57 mm
height:	28 mm
length:	50 mm
thermal resistance:	6 - 2.3 K/W
surface:	black anodised
custom processing:	• individual CNC machining • desired length

Technical Drawing

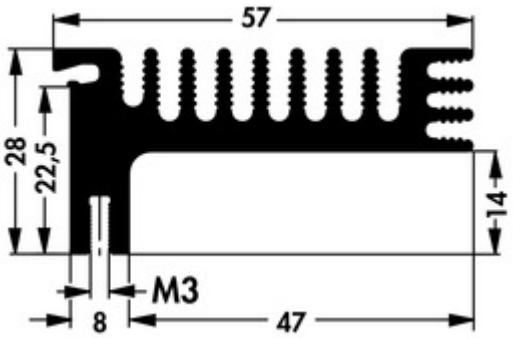

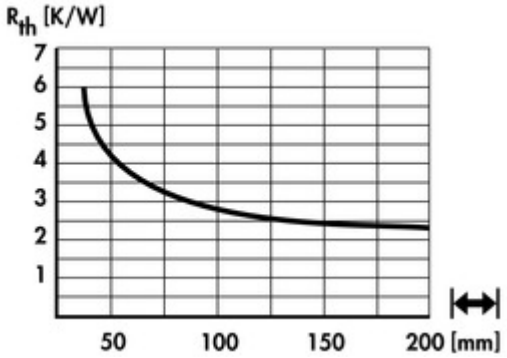

Fischer Elektronik GmbH & Co. KG
DEUTSCHLAND • GERMANY • ALLEMAGNE
Nottebohmstraße 28
58511 Lüdenscheid
Telefon +49 2351 435-0
Telefax +49 2351 45754
info@fischerelektronik.de
www.fischerelektronik.de