| REVISIONS | | | | | |
|---|---|---|---|---|---|
| REV | ECO | DESCRIPTION | DATE | BY | APPR |
| B1 | - | RELEASE NEW DWG FORMAT | 06/16/14 | TOD | TOMMY |
| B2 | - | UPDTAED SPECIFICATION | 09/14/15 | TOD | TOMMY |

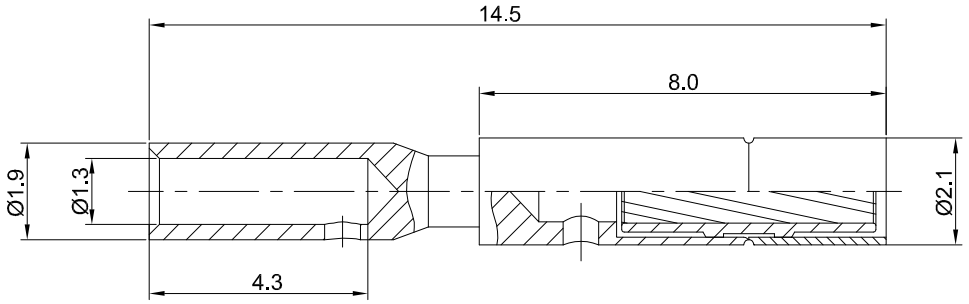


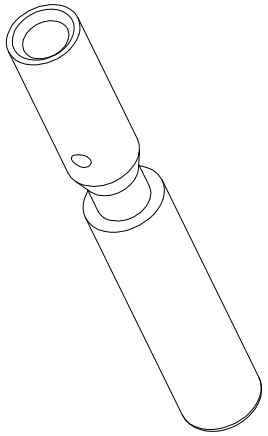

NOTES: UNLESS OTHERWISE SPECIFIED

1. MATERIAL: COPPER ALLOY, GOLD PLATED

2. SPECIFICATIONS:
   2.1 RATED CURRENT: 10 AMPS
   2.2 CONTACT RESISTANCE: <5 milliohm
   2.3 AVAILABLE WIRE RANGE: 18AWG~22AWG
   2.4 RoHS COMPLIANT

3. ALL DIMENSIONS ARE FOR REFERENCE USE ONLY.

| QUANTITY | PART NUMBER | DESCRIPTION | ITEM |
|---|---|---|---|
| | SEE PART NUMBER CHART | | |

MATERIALS LIST

UNLESS OTHERWISE SPECIFIED
1) All dimensions are in metric(mm).
2) Tolerances are as follows:
1 PL DEC ±0.30 | Fractions ±1/64
2 PL DEC ±0.15 | Angles ±1°
3 PL DEC ±0.08
3) Note reference = X

MATERIAL SPECIFICATIONS:

PROCESS SPECIFICATIONS:

NEXT ASS'Y:

| SIGNATURES | | DATE |
|---|---|---|
| DRAWN: | Tod | 09/14/15 |
| CHECKED: | | |
| ENGINEER: | | |
| APPROVAL: | | |
| CUSTOMER: | | |

THIS DRAWING IS SUPPLIED FOR INFORMATION ONLY. DESIGN FEATURES, SPECIFICATIONS AND PERFORMANCE DATA SHOWN HEREON ARE THE PROPERTY OF THE AMPHENOL CORPORATION. NO RIGHTS OF REPRODUCTION ARE IMPLIED. ALL DIMENSIONS ARE SUBJECT TO NORMAL MANUFACTURING VARIATIONS.

Amphenol

Sine Systems - www.amphenol-sine.com
44724 Morley Drive
Clinton Township, MI 48036

Socket contact,20#,Crimp 18~22AWG

| SIZE | TYPE | DWG NO: | REVISION |
|---|---|---|---|
| B | C- | SC000013 | B2 |

SCALE: NONE SHEET 1 OF 1

TITLE: Socket contact,20#,Crimp 18~22AWG
DWG NO: SC000013
REV: B2
SH: 1
OF: 1