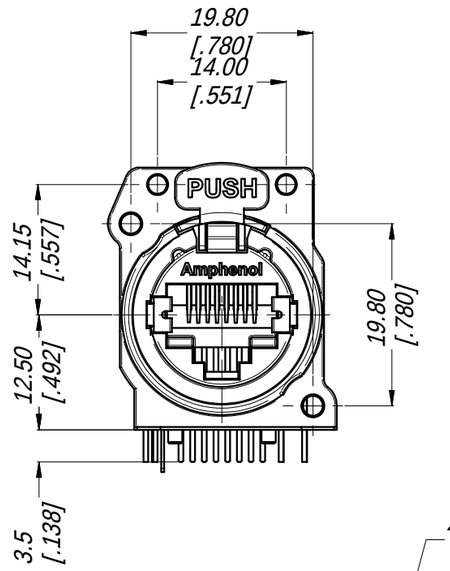

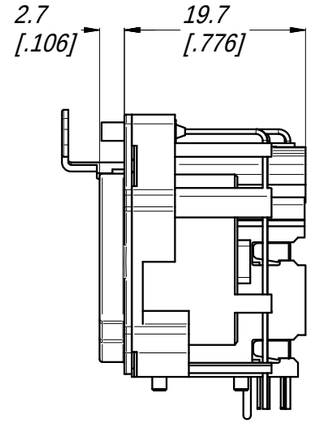

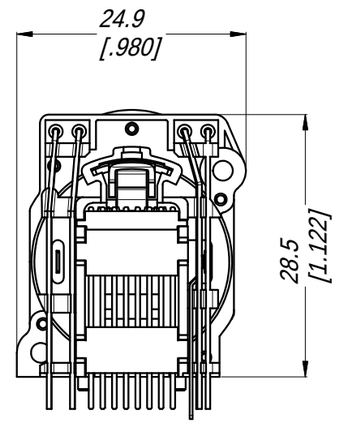

TABLE OF PART NUMBERS

PART No.		
METAL FRONT SHELL FINISH	LED COLOR	
NICKEL	LEFT	RIGHT
RJX8FB5HRGB	RED	GREEN
RJX8FB5HRYB	RED	YELLOW
RJX8FB5HRRB	RED	RED
RJX8FB5HGRB	GREEN	RED
RJX8FB5HGYB	GREEN	YELLOW
RJX8FB5HGGB	GREEN	GREEN
RJX8FB5HYRB	YELLOW	RED
RJX8FB5HYYB	YELLOW	YELLOW
RJX8FB5HUUB	BLUE	BLUE

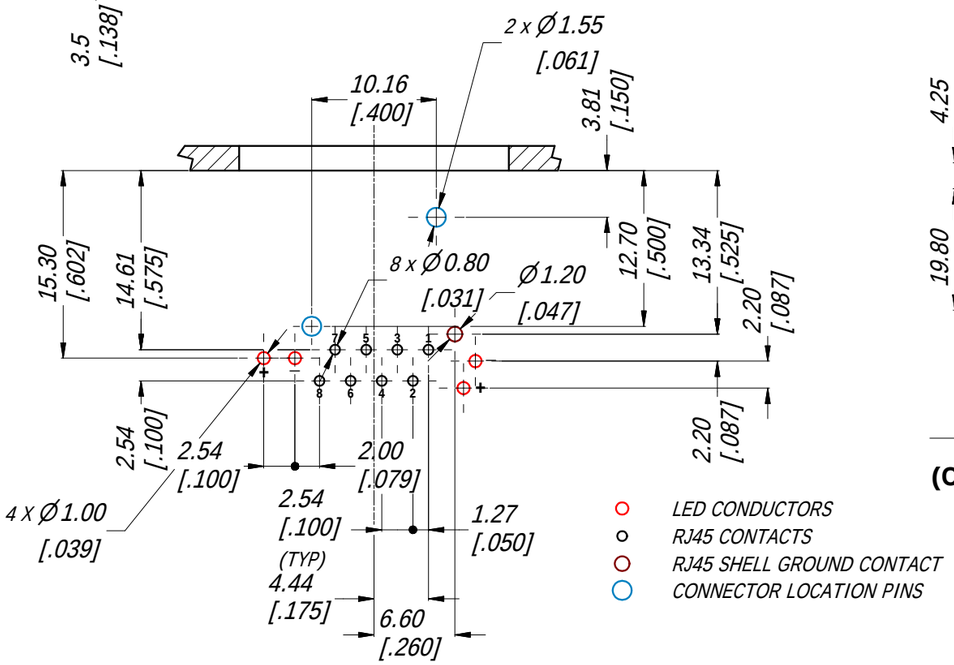

PCB LAYOUT
2:1
(CONNECTOR TOP VIEW)

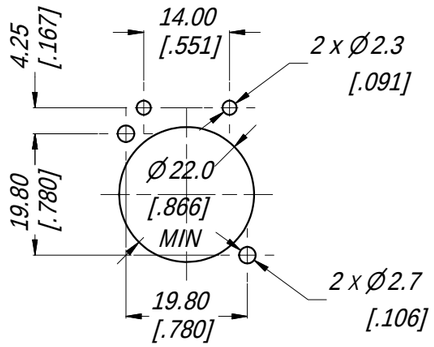

PANEL CUT OUT
1:1
(CONNECTOR FRONT VIEW)

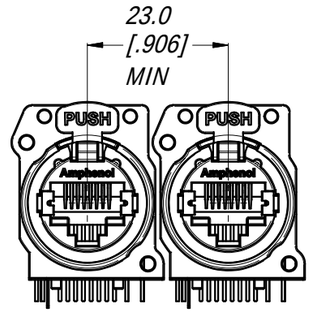

MIN MOUNTING PITCH
1:1

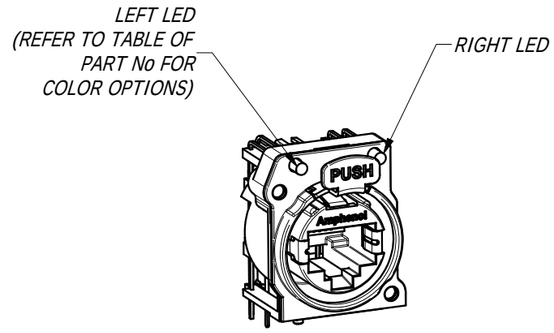

3D VIEW
1:1

SPECIFICATIONS:
1. MATERIALS:
- PLASTIC INSERT & HOUSING: HIGH TEMPERATURE THERMOPLASTIC FLAMMABILITY RATING UL94V-0 DSM Stanyl, 30% BLACK
- FRONT METAL SHELL: ZINC ALLOY ZAMAK 3, NICKEL PLATE (B TYPE) .
- CONTACTS: PHOSPHORE BRONZE, 1.27 um GOLD PLATE ON MATING SURFACES, 1.27 um NICKEL MIN UNDERPLATE. 3.81 um MIN MATTE TIN ON CONTACT TAILS.
- LATCH LOCK AND SPRING: SPRING STEEL, NICKEL PLATE.
- EMI/RFI HOOD: BRASS, TIN PLATE
2. ELECTRICAL CHARACTERISTICS:
- RATED VOLTAGE: 125 VAC
- TYPICAL CONTACT RESISTANCE: 20 mOhm
- INSULATION RESISTANCE: >500 MOhm
- DIELECTRIC STRENGTH: 1000 VAC, 60 SECONDS
- TRANSMISSION SPECIFICATION/CLASS: COMPLIES WITH CAT5e 1000 BASE-T PER EIA-568-C.2
- PoE+ COMPLIES WITH 802.3at Type 2 (SEE PSE PINOUT ALTERNATIVE TABLE)

Amphenol Australia RoHS Compliant EU 2002/95/EC

PSE PINOUT ALTERNATIVES

CONDUCTOR	Alternative-A (MDI-X)	Alternative-A (MDI)	Alternative-A (All)
1	Negative V_{PSE}	Positive V_{PSE}	
2	Negative V_{PSE}	Positive V_{PSE}	
3	Positive V_{PSE}	Negative V_{PSE}	
4			Positive V_{PSE}
5			Positive V_{PSE}
6	Positive V_{PSE}	Negative V_{PSE}	
7			Negative V_{PSE}
8			Negative V_{PSE}

UNLESS OTHERWISE SPECIFIED TOLERANCE TO BE LINEAR: X ± 0.5, X.X ± 0.1, X.X ± 0.05 ANGULAR: X° ± 1, X.X' ± 30', X.X'X " ± 15' BREAK ALL SHARP EDGES AND REMOVE ALL BURRS	THIS DOCUMENT IS THE PROPERTY OF AMPHENOL AUSTRALIA PTY. LTD. . NO PART THEREOF MAY BE REPRODUCED AND USED WITHOUT THE PRIOR WRITTEN CONSENT OF THE OWNER.	**Amphenol**	**Amphenol Australia Pty.Ltd, 20 Industry Blvd, Carrum Downs VIC 3201 Australia**	
	MATERIAL: **REFER SPECIFICATION**	DRN: T.N	DATE: 20/05/12	TITLE: **XLRnet CONNECTOR RJ45 RECP CAT5e NON-EMI SHIELD**
		CKD: P.M	DATE: 21/05/12	PART No: **REFER TO TABLE OF PART NUMBERS** / REV **1**
DO NOT SCALE	FINISH:	APP'D: P.M	DATE: 21/05/12	DRAWING No. **55010837-000** / SHEET **1/1**
DIMENSIONS IN MILIMETRES	THIRD ANGLE PROJECTION	SCALE: **3:2**	SIZE: **A3**	