AVAILABLE BY SPECIAL ORDER ONLY

PART NO.	DIM. "A" ±.015(0.4)
CPST–2–01	1/8 (3.2)
CPST–3–01	3/16 (4.8)
CPST–4–01	1/4 (6.4)
CPST–5–01	5/16 (7.9)
CPST–6–01	3/8 (9.5)
CPST–7–01	7/16 (11.1)
CPST–8–01	1/2 (12.7)
CPST–9–01	9/16 (14.3)
CPST–10–01	5/8 (15.9)

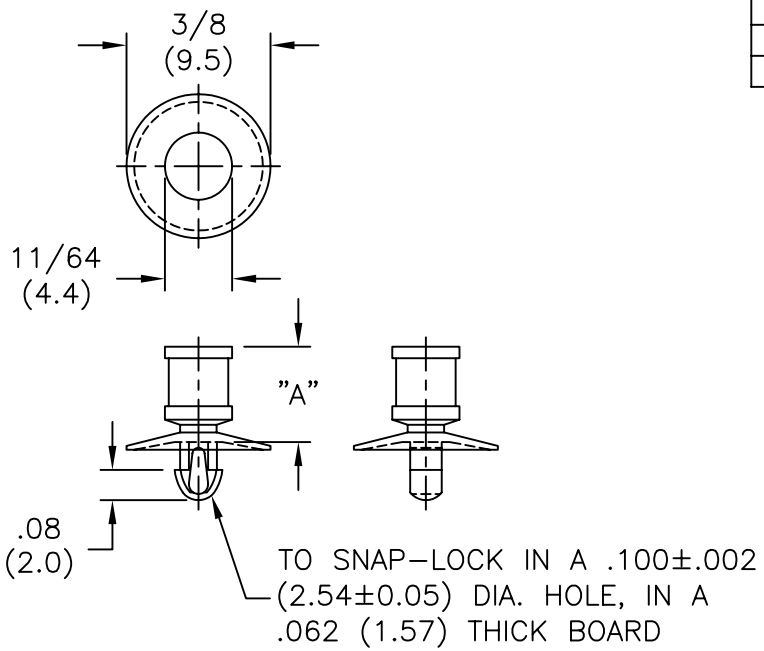

NOTES:
1. MAT'L: NYLON 6/6 (RMS–01).
   FLAME RETARDANT, NYLON (RMS–19),
   AVAILABLE BY SPECIAL ORDER ONLY.
2. COLOR: NATURAL.

REV	DESCRIPTION	ENGR DATE
D	SEE ECN #862 FOR CHANGES	SM 10.04.04
C	CHANGED FILE NUMBER	SM 05.04.01
B	MAT'L RMS–19 ADDED	J.L. 12.19.97
A	CONVERTED TO ACAD	PB 02.28.95

TITLE: CUPPED PUSH SPACER, TEARDROP

DWG IN IN (MM)

TOLERANCES UNLESS NOTED
.XX=±.010
.XXX=±.005
FRAC=±1/64
ANG=±1°

FILE # CPST
MAT'L: SEE NOTES
RE: RICHCO, INC.

DWN: P.B.
DT: 02–28–95
APP:
DT:

RICHCO INC.
PO BOX 804238,CHICAGO,60680
(773) 539–4060

FINAL

PART # SEE TABLE

PRINT TYPE CA