OptoSupply
Light It Up

2.0mm Tower Red & Blue LED

OSRBMC7K92B

■Features

- High Luminous LEDs
- 2.0mm Tower Standard Directivity
- UV Resistant Epoxy
- White Diffused Type
- Common Cathode Type

■Applications

- Toys
- Games
- Audio
- Other Lighting

■Outline Dimension

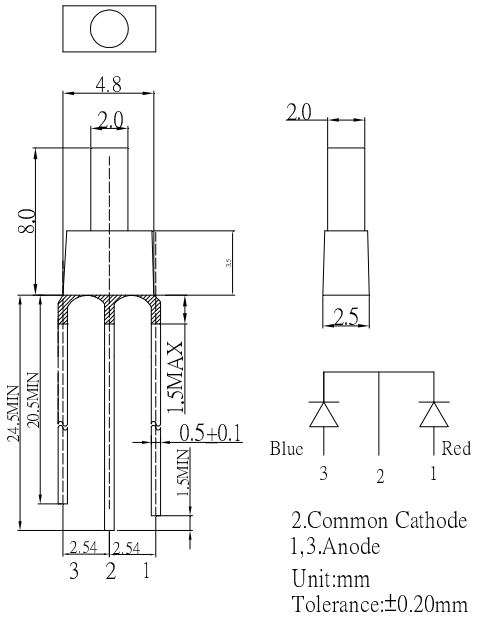

■Absolute Maximum Rating (Ta=25℃)

Item	Symbol	Value		Unit
		Red	Blue	
DC Forward Current	I_F	30	30	mA
Pulse Forward Current#	I_{FP}	100	100	mA
Reverse Voltage	V_R	5	5	V
Power Dissipation	P_D	78	102	mW
Operating Temperature	Topr	-30~ +85		℃
Storage Temperature	Tstg	-40 ~ +100		℃
Lead Soldering Temperature	Tsol	260℃/5sec		–

#Pulse width Max.10ms Duty ratio max 1/10

■Directivity

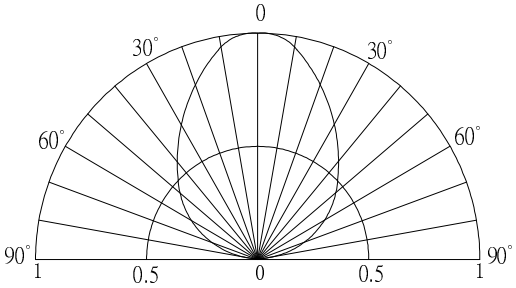

■Electrical -Optical Characteristics (Ta=25℃)

Item	Symbol	Condition	Min.	Typ.	Max.	Unit
DC Forward Voltage*1	V_F (Red)	I_F=20mA	-	2.1	2.6	V
	V_F (BL)	I_F=20mA	-	3.1	3.6	V
DC Reverse Current	I_R	V_R=5V	-	-	10	μA
Domi. Wavelength*2	λ_D (Red)	I_F=20mA	620	625	630	nm
	λ_D (BL)	I_F=20mA	450	455	460	nm
Luminous Intensity*3	Iv (Red)	I_F=20mA	750	1120	-	mcd
	Iv (BL)	I_F=20mA	330	500	-	mcd
50% Power Angle	$2\theta_{1/2}$	I_F=20mA	-	90	-	deg

*1 Tolerance of measurements of forward voltage is ±0.1V
*2 Tolerance of measurements of dominant wavelength is ±1nm
*3 Tolerance of measurements of luminous intensity is ±15%