FOR 客户名称	APPROVED 客户确认签字	ATTN 销售负责人

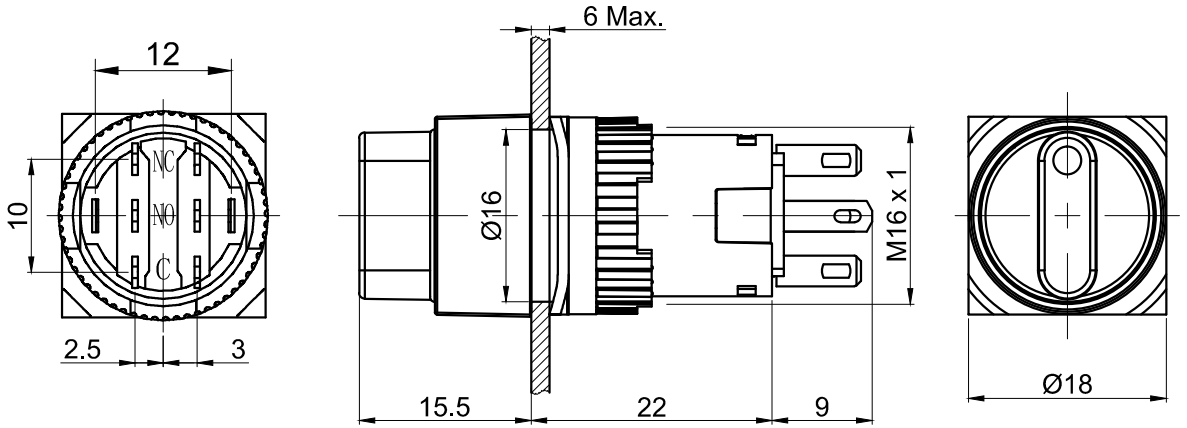

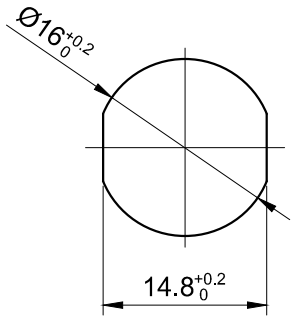

PANEL CUTOUT
MAX.PANEL THICKNESS
6 mm

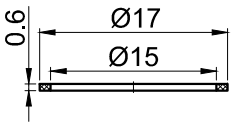

Seal Ring

Contact Composition

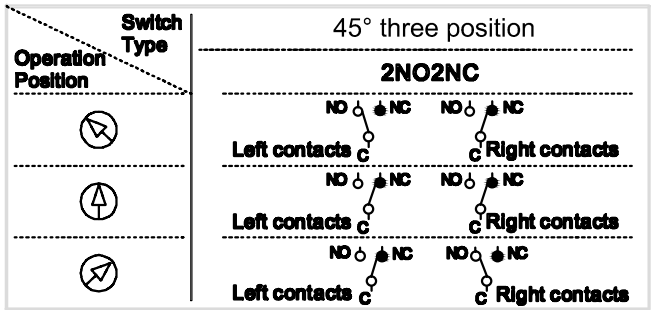

Part Number:LAS1-AY-□X/◇◆/△/▲/◎

"□"	Contact structure
22	2NO 2NC

"◇"	Operation position
3	Three Position

"◆"	Operation type
1	Maintain
3	Return

"△"	Lamp Color
R	Red
G	Green
Y	Yellow

"▲"	Lamp Voltage
6V	AC/DC 6V
12V	AC/DC 12V
24V	AC/DC 24V
110V	AC/DC 110V
220V	AC/DC 220V
Other voltage can be made to order	

"◎"	IP class
No Letter	IP40
P	IP65

SPECIFICATIONS:

1.Switch Rating: AC220V/0.5A, DC110V/0.1A.
2.Mechanical Life: ≥200,000cycles.
3.Electrical Life: ≥50,000cycles.
4.Contact Resistance: ≤50mΩ.
5.Insulation Resistance: ≥100MΩ.
6.Dielectric Strength:
Between contact and lamp terminals: AC 2,000V, RMS 50Hz, 1min;
Between terminals of the same pole: AC 1,500V, RMS 50Hz, 1min;
Between terminals of different pole: AC 2,000V, RMS 50Hz, 1min.
7.Operating Temperature: -25˚C～ +55˚C(No Freezing).
8.IP Class: IP40,IP65(Maintain can made to order).
9.Terminal Type: Pin Terminal(2.8 x 0.5mm).

MATERIALS:

1.Contact: Silver alloy.
2.Head: PC.
3.Body: PC.
4.Base: PBT.

DIMENSIONS	TOLERANCE
0.00 TO 18.00mm	±0.43mm
18.01 TO 30.00mm	±0.52mm
30.01 TO 50.00mm	±0.62mm
50.01 TO 80.00mm	±0.74mm

THESE DRAWINGS AND SPECIFICATIONS ARE THE PROPERTY OF ONPOW PUSH BUTTON MANUFACTURE CO.,LTD. AND SHALL NOT BE REPRODUCED COPIED OR USED IN ANY MANNER WITHOUT THE PRIOR WRITTEN CONSENT OF ONPOW PUSH BUTTON MANUFACTURE CO.,LTD.

BRAND 品牌 ONPOW

红波按钮制造有限公司
ONPOW PUSH BUTTON MANUFACTURE CO.,LTD.

USED 用途		APPD 审核	CH 2020/04/26
FINISH 处理		CHKD 校对	NCH 2020/04/26
SCALE 比例 1.4 : 1	UNIT 单位 mm	DR. 制图	ZPD 2020/04/26
TITLE 名称	LAS1-A Series selector switch		
DWG NO. 图号	LAS1-AY-X三位置带灯	SIZE 图纸	A4
FILE NAME 档案名称	LAS1-A-X.DWG	SHEET 张 1 / 1	REV. 更改 1