Data sheet Product LAM 5 150 12

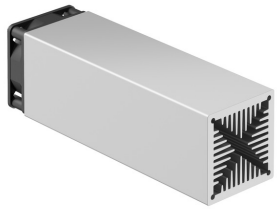

Cooling aggregates>Miniature cooling aggregates
50 x 50 mm, with axial fan

Features

width:	**50 mm**
height:	**50 mm**
length:	**150 mm**
thermal resistance:	**1.38 - 0.27 K/W**
operating voltage of the fan motor:	• **5 V DC** • **12 V DC** • **24 V DC**
surface:	**natural colour anodised**

Technical Drawing

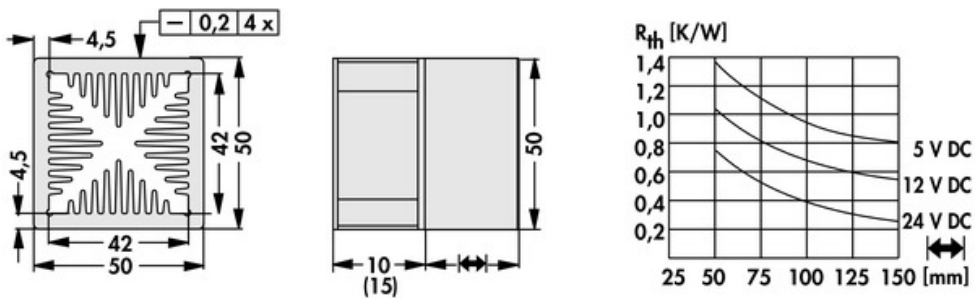

Fan

Kugelgelagert, 5 V DC

type:	**Sepa, ball bearing**
dimensions:	**50x50x10 mm**
tension:	**5 V DC**
max. air volume:	**10 m^3/h**
temperature range:	**-10°C... +70°C**
speed:	**3,400 min^{-1}**
noise level:	**17 dB(A)**
weight:	**19 g**
failure rate (L_{10}):	**L_{10} < 95,000 h (20°C)** **MTBF < 280,000 h (20°C)**
alarm output:	**with**

Kugelgelagert, 12 V DC

type:	**Sepa, ball bearing**
dimensions:	**50x50x10 mm**
tension:	**12 V DC**
max. air volume:	**14.3 m^3/h**
temperature range:	**-10°C... +70°C**
speed:	**4,800 min^{-1}**
noise level:	**22 dB(A)**
weight:	**19 g**
failure rate (L_{10}):	**L_{10} < 95,000 h (20°C)** **MTBF < 280,000 h (20°C)**
alarm output:	**with**

Kugelgelagert, 24 V DC

type:	**ebmpapst**
dimensions:	**50x50x15 mm**
tension:	**24 V DC**
max. air volume:	**20 m^3/h**
temperature range:	**-20°C... +70°C**

speed:	**5,000 min^{-1}**
noise level:	**30 dB(A)**
weight:	**27 g**
failure rate (L_{10}):	**L_{10} 50,000 h (20°C)**