GR CSHPM1.23

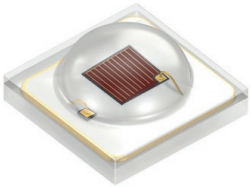

OSLON® SSL 150

New, higher performing OSLON SSL family LED with well known superior robustness, high reliability, long lifetime, low thermal resistance. Perfectly addressing applications demanding for high efficiency and long lifetime requirement.

Applications

- Architecture
- Architecture / Garden Lighting (LED & Laser)
- Medical Illumination
- Photo Therapy

Features:

- Package: SMT ceramic package with silicone lens
- Typ. Radiation: 150°
- Lumen maintenance: Test results according to IESNA LM-80 available
- ESD: 8 kV acc. to ANSI/ESDA/JEDEC JS-001 (HBM, Class 3B)
- Luminous Flux: typ. 86 lm
- Luminous efficacy: typ. 117 lm/W

OSRAM
Opto Semiconductors

Ordering Information

Type	Luminous Flux [1] I_F = 350 mA Φ_V	Ordering Code
GR CSHPM1.23-KQKS-1	76 ... 97 lm	Q65113A0418

Maximum Ratings

Parameter	Symbol		Values
Operating Temperature	T_{op}	min. max.	-40 °C 125 °C
Storage Temperature	T_{stg}	min. max.	-40 °C 125 °C
Junction Temperature	T_j	max.	135 °C
Forward current	I_F	min. max.	100 mA 1000 mA
Surge Current t ≤ 10 µs; D = 0.005 ; T_J = 25 °C	I_{FS}	max.	2000 mA
Reverse current [2)]	I_R	max.	200 mA
ESD withstand voltage acc. to ANSI/ESDA/JEDEC JS-001 (HBM, Class 3B)	V_{ESD}		8 kV

Characteristics

I_F = 350 mA; T_J = 25 °C

Parameter	Symbol		Values
Peak Wavelength	λ_{peak}	typ.	634 nm
Dominant Wavelength [3)] I_F = 350 mA	λ_{dom}	min. typ. max.	620 nm 623 nm 632 nm
Spectral Bandwidth at 50% $I_{rel,max}$	$\Delta\lambda$	typ.	16 nm
Viewing angle at 50% I_V	2φ	typ.	150 °
Forward Voltage [4)] I_F = 350 mA	V_F	min. typ. max.	1.90 V 2.10 V 2.50 V
Reverse voltage (ESD device)	$V_{R\ ESD}$	min.	45 V
Reverse voltage [2)] I_R = 20 mA	V_R	max.	1.2 V
Electrical thermal resistance junction/solderpoint with efficiency η_e = 53 %	$R_{thJS\ elec.}$	typ.	2.5 K / W

Brightness Groups

Group	Luminous Flux [1] I_F = 350 mA min. Φ_V	Luminous Flux [1] I_F = 350 mA max. Φ_V
KQ	76 lm	82 lm
KR	82 lm	89 lm
KS	89 lm	97 lm

Wavelength Groups

Group	Dominant Wavelength [3] I_F = 350 mA min. λ_{dom}	Dominant Wavelength [3] I_F = 350 mA max. λ_{dom}
1	620 nm	632 nm

OSRAM
Opto Semiconductors

Group Name on Label

Example: KQ-1

Brightness	Wavelength
KQ	1

Relative Spectral Emission [5)]

$I_{rel} = f(\lambda)$; $I_F = 350$ mA; $T_J = 25$ °C

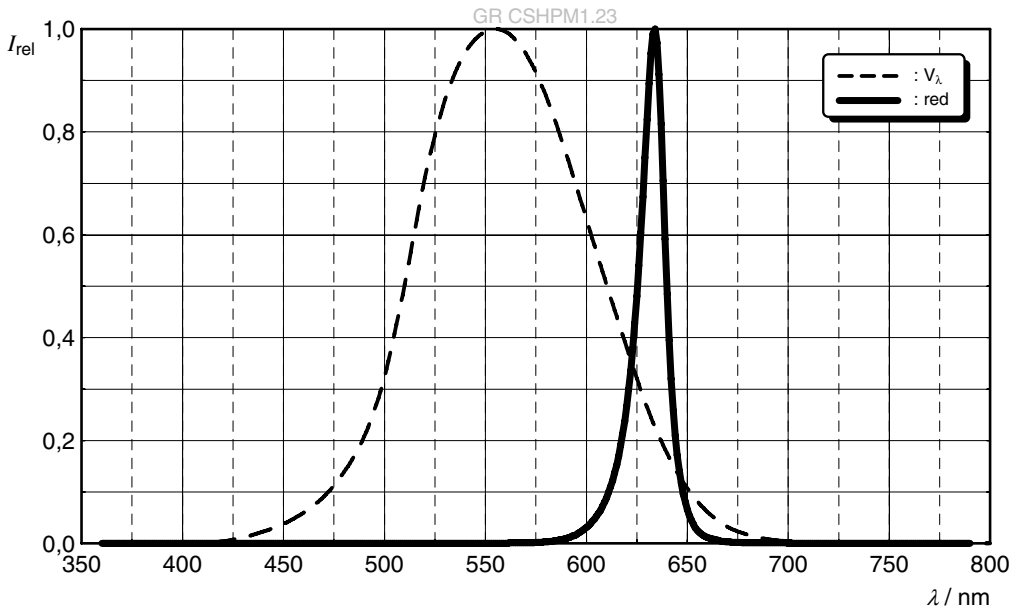

Radiation Characteristics [5)]

$I_{rel} = f(\phi)$; $T_J = 25$ °C

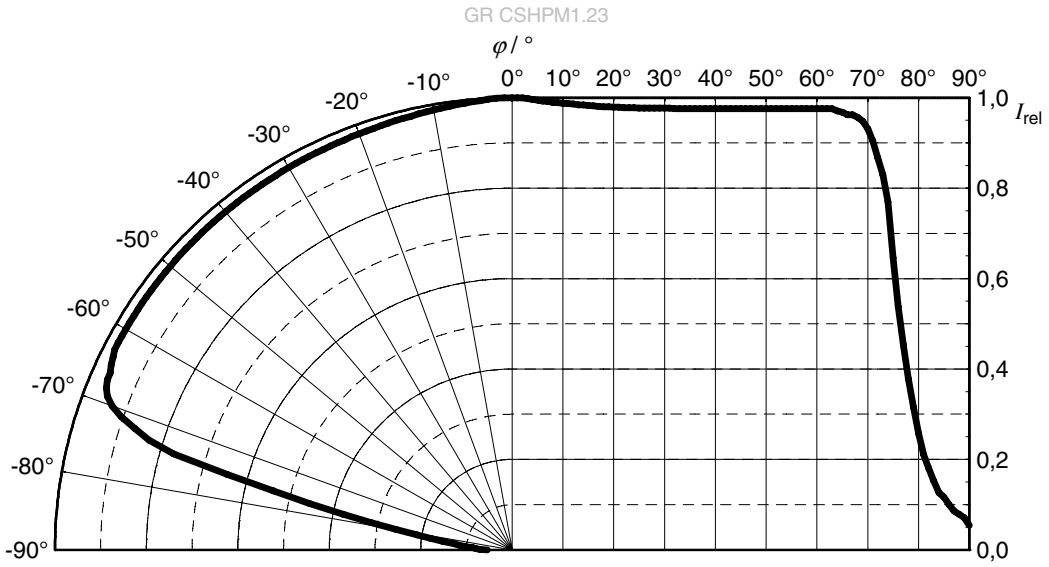

OSRAM
Opto Semiconductors

Forward current [5), 6)]

$I_F = f(V_F)$; T_J = 25 °C

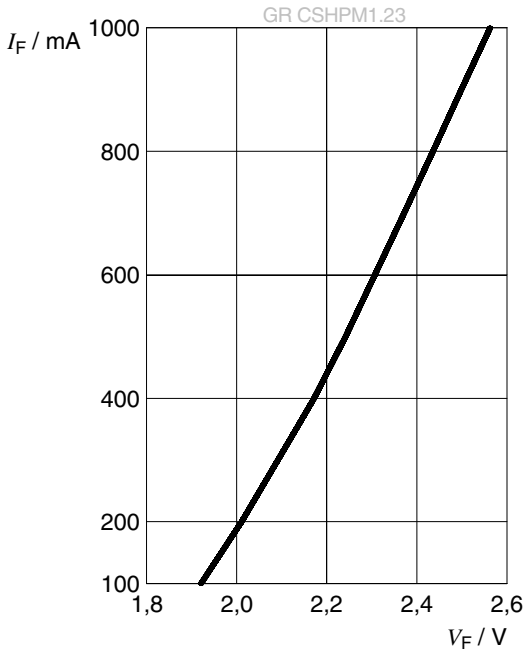

Relative Luminous Flux [5), 6)]

$\Phi_v/\Phi_v(350\ mA) = f(I_F)$; T_J = 25 °C

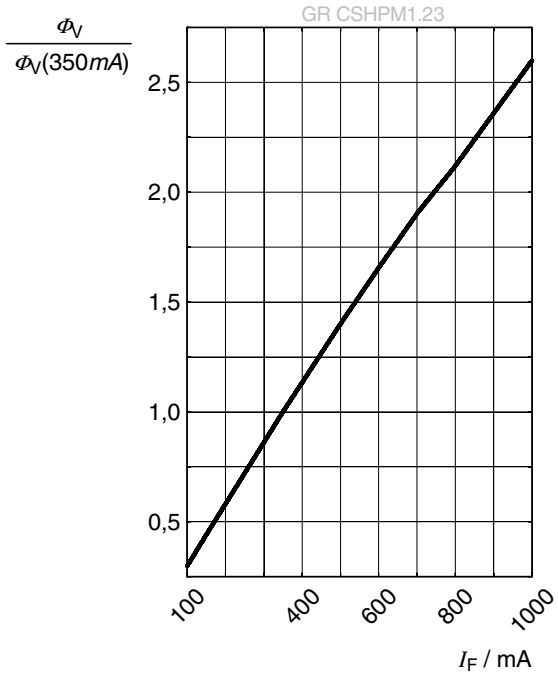

Dominant Wavelength [5)]

$\Delta\lambda_{dom} = f(I_F)$; T_J = 25 °C

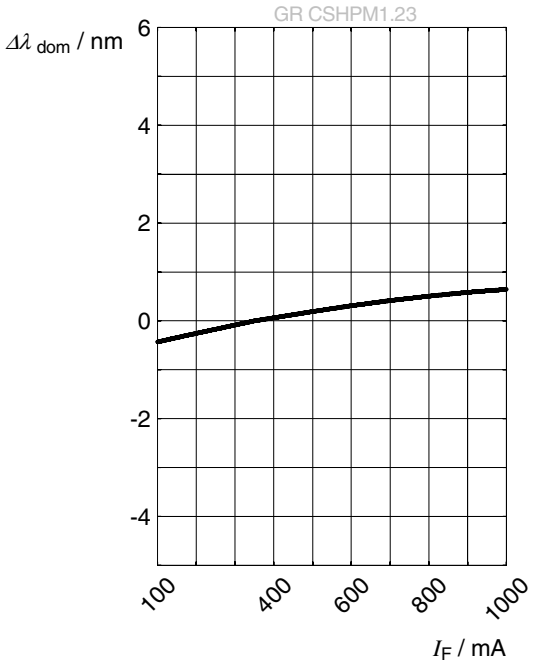

OSRAM
Opto Semiconductors

Forward Voltage [5)]

$\Delta V_F = V_F - V_F(25\ °C) = f(T_j)$; $I_F = 350$ mA

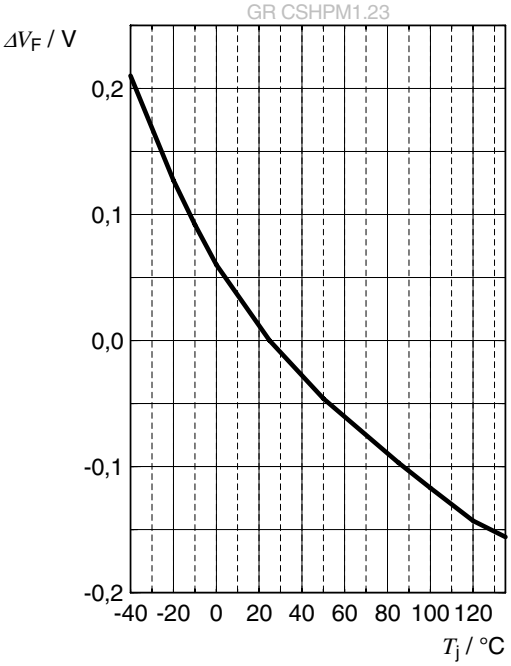

Relative Luminous Flux [5)]

$\Phi_v/\Phi_v(25\ °C) = f(T_j)$; $I_F = 350$ mA

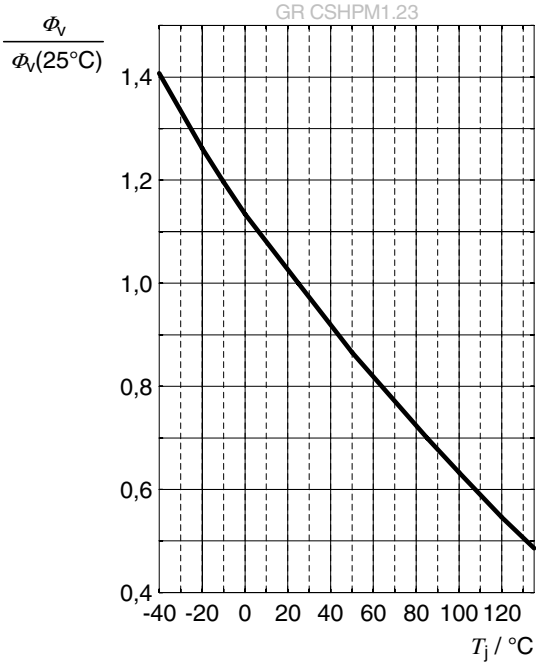

Dominant Wavelength [5)]

$\Delta\lambda_{dom} = \lambda_{dom} - \lambda_{dom}(25\ °C) = f(T_j)$; $I_F = 350$ mA

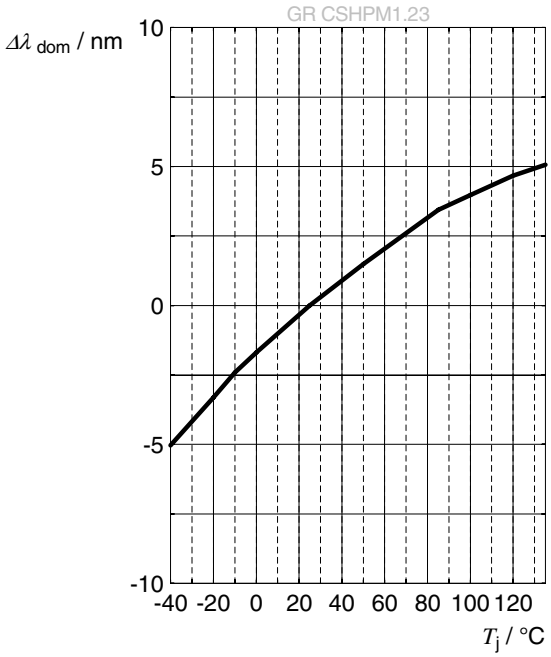

OSRAM
Opto Semiconductors

Max. Permissible Forward Current

$I_F = f(T)$

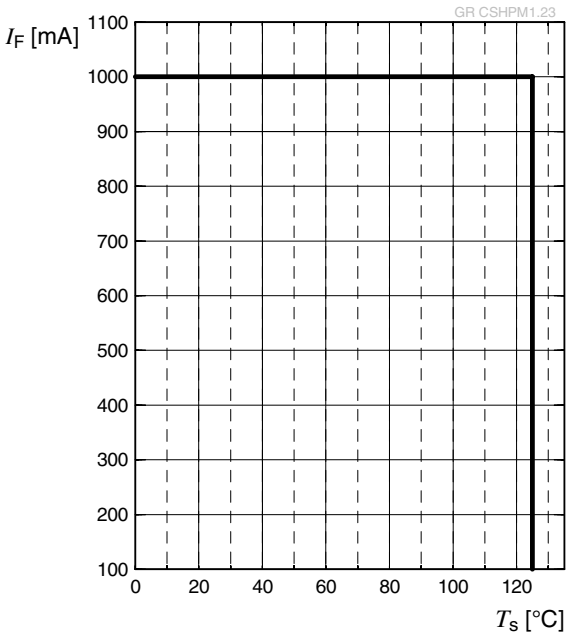

OSRAM
Opto Semiconductors

Dimensional Drawing [7)]

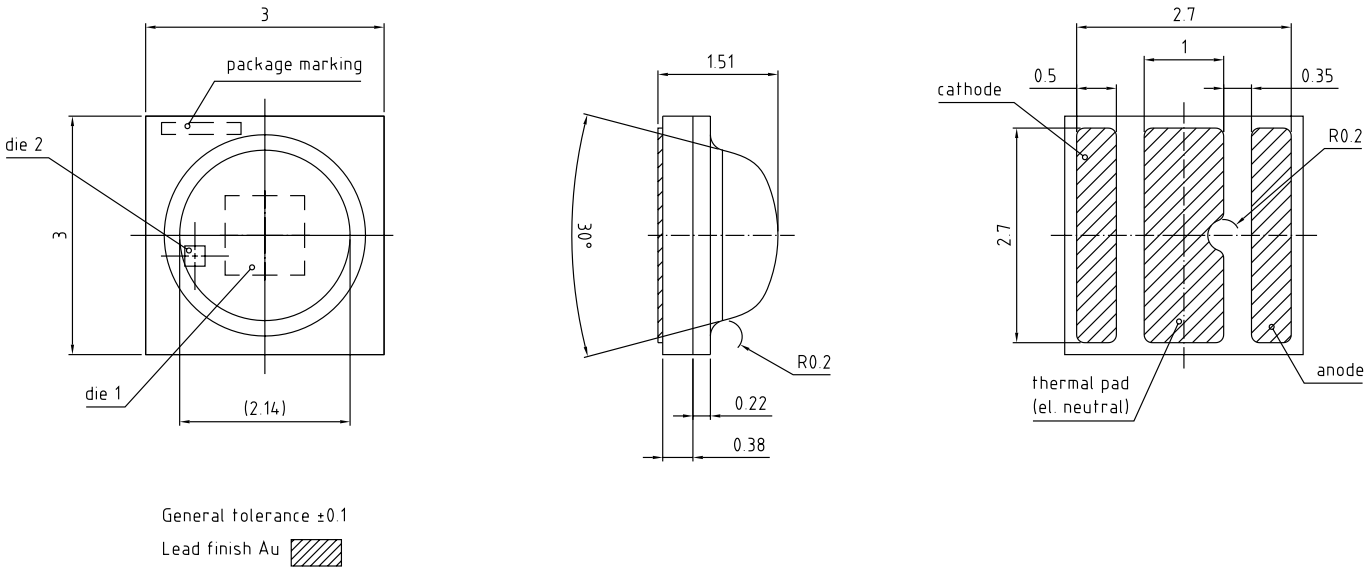

Further Information:

Approximate Weight: 24.0 mg

Package marking: Anode

ESD advice: The device is protected by ESD device which is connected in parallel to the Chip.

OSRAM
Opto Semiconductors

Recommended Solder Pad [7)]

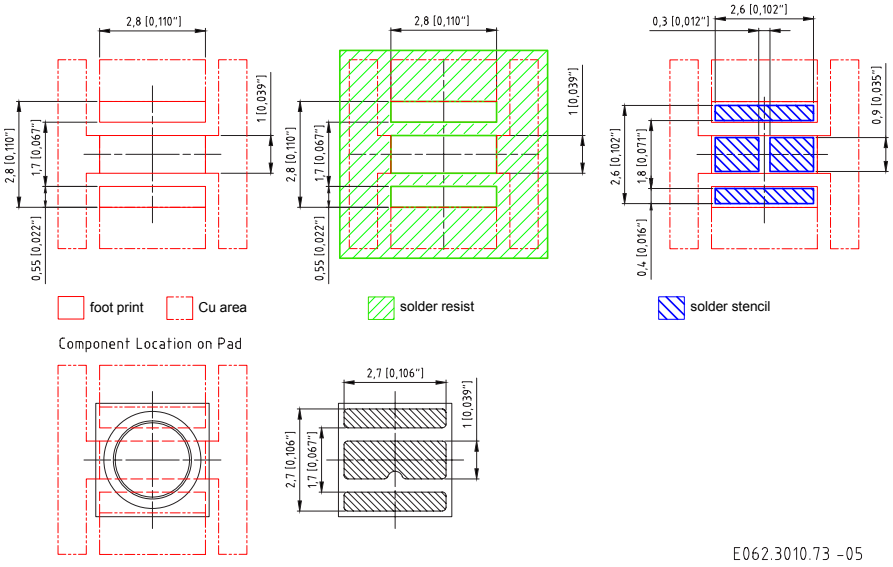

For superior solder joint connectivity results we recommend soldering under standard nitrogen atmosphere. Further information can be found in our Application Note: “Handling and Processing Details for Ceramic LEDs”.

OSRAM
Opto Semiconductors

Reflow Soldering Profile

Product complies to MSL Level 2 acc. to JEDEC J-STD-020E

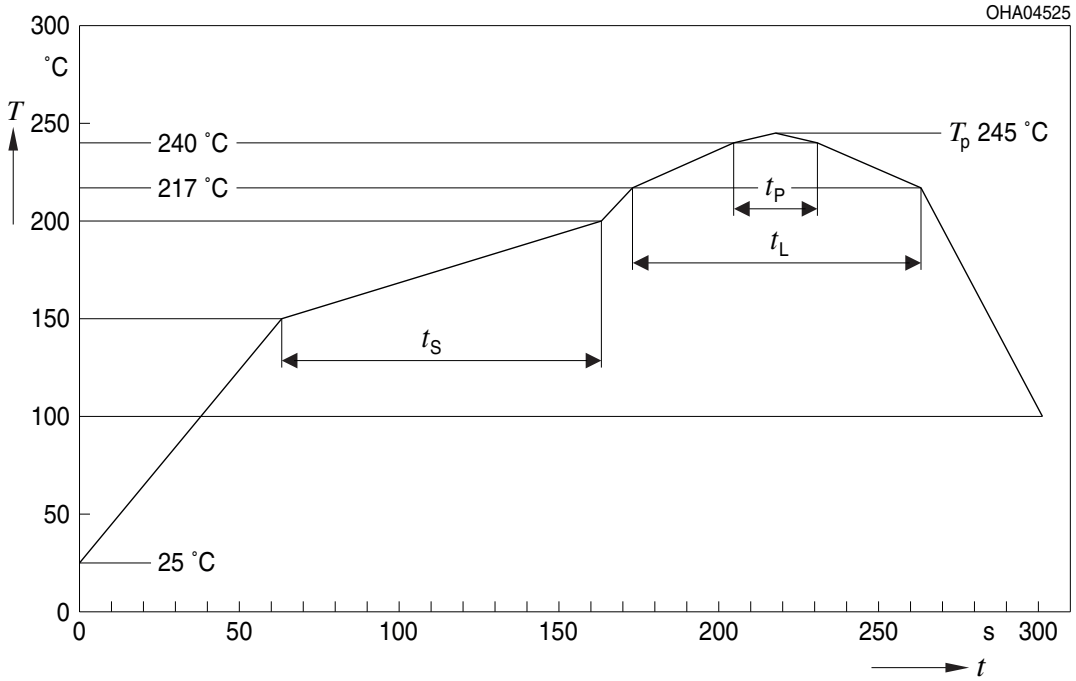

Profile Feature	Symbol	Pb-Free (SnAgCu) Assembly			Unit
		Minimum	Recommendation	Maximum	
Ramp-up rate to preheat*) 25 °C to 150 °C			2	3	K/s
Time t_S T_{Smin} to T_{Smax}	t_S	60	100	120	s
Ramp-up rate to peak*) T_{Smax} to T_P			2	3	K/s
Liquidus temperature	T_L		217		°C
Time above liquidus temperature	t_L		80	100	s
Peak temperature	T_P		245	260	°C
Time within 5 °C of the specified peak temperature T_P - 5 K	t_P	10	20	30	s
Ramp-down rate* T_P to 100 °C			3	6	K/s
Time 25 °C to T_P				480	s

All temperatures refer to the center of the package, measured on the top of the component
* slope calculation DT/Dt: Dt max. 5 s; fulfillment for the whole T-range

OSRAM
Opto Semiconductors

Taping [7)]

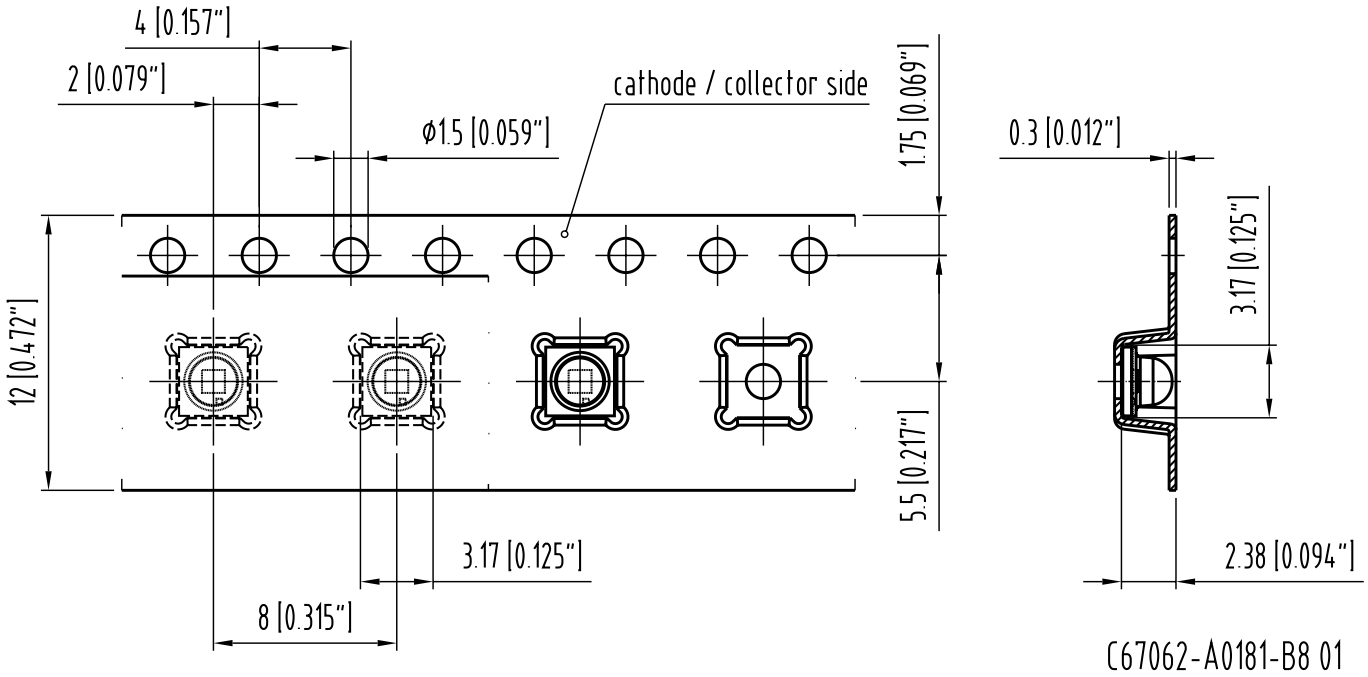
4 [0.157"]
2 [0.079"]
cathode / collector side
ϕ1.5 [0.059"]
1.75 [0.069"]
0.3 [0.012"]
3.17 [0.125"]
12 [0.472"]
5.5 [0.217"]
3.17 [0.125"]
2.38 [0.094"]
8 [0.315"]
C67062-A0181-B8 01

Tape and Reel [8)]

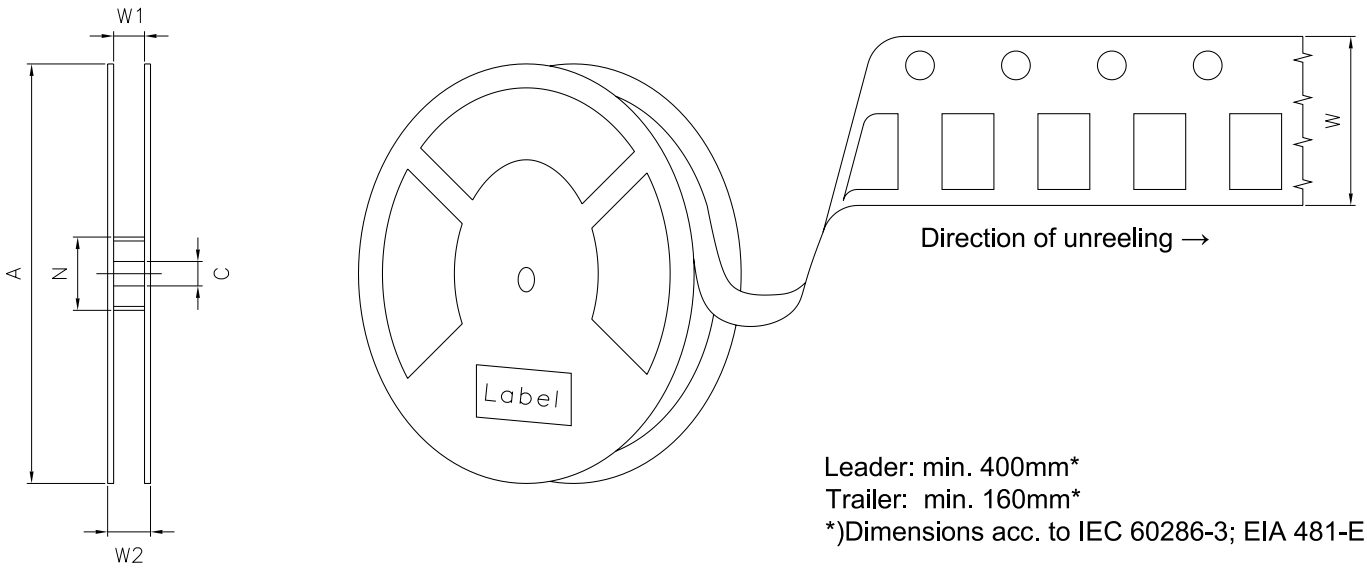

Leader: min. 400mm*
Trailer: min. 160mm*
*)Dimensions acc. to IEC 60286-3; EIA 481-E

Reel Dimensions

A	W	N_{min}	W_1	$W_{2\,max}$	Pieces per PU
180 mm	12 + 0.3 / - 0.1 mm	60 mm	12.4 + 2 mm	18.4 mm	600

OSRAM
Opto Semiconductors

Barcode-Product-Label (BPL)

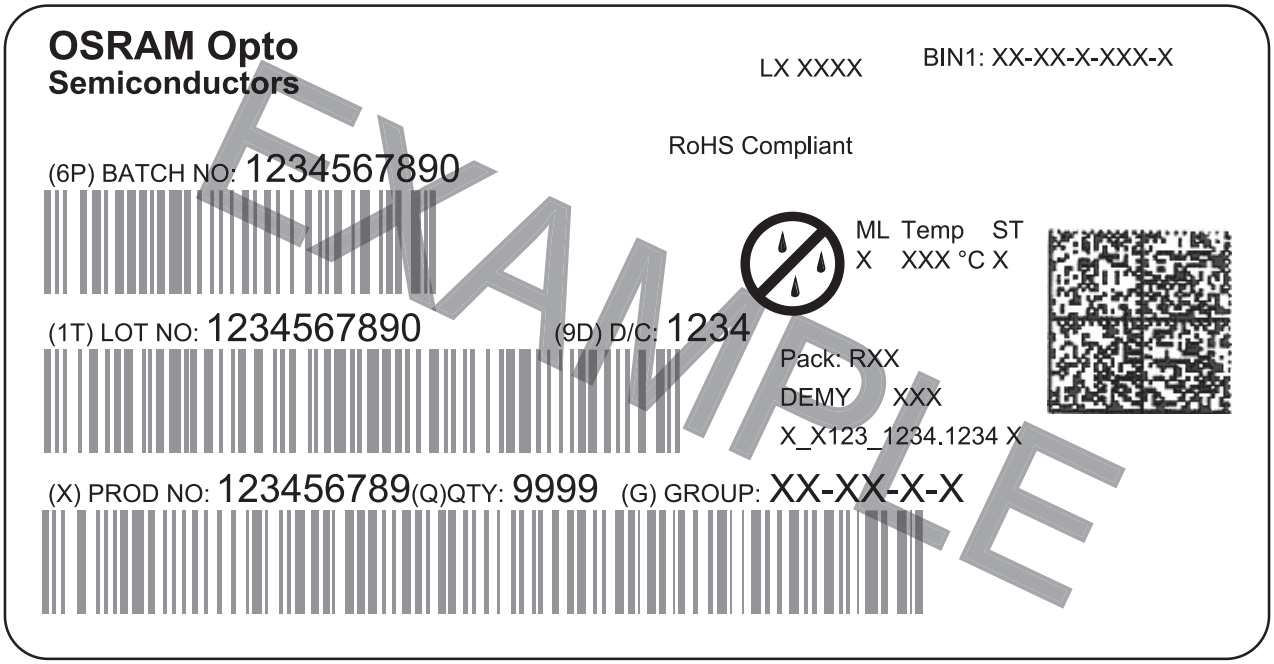

OHA04563

Dry Packing Process and Materials [7)]

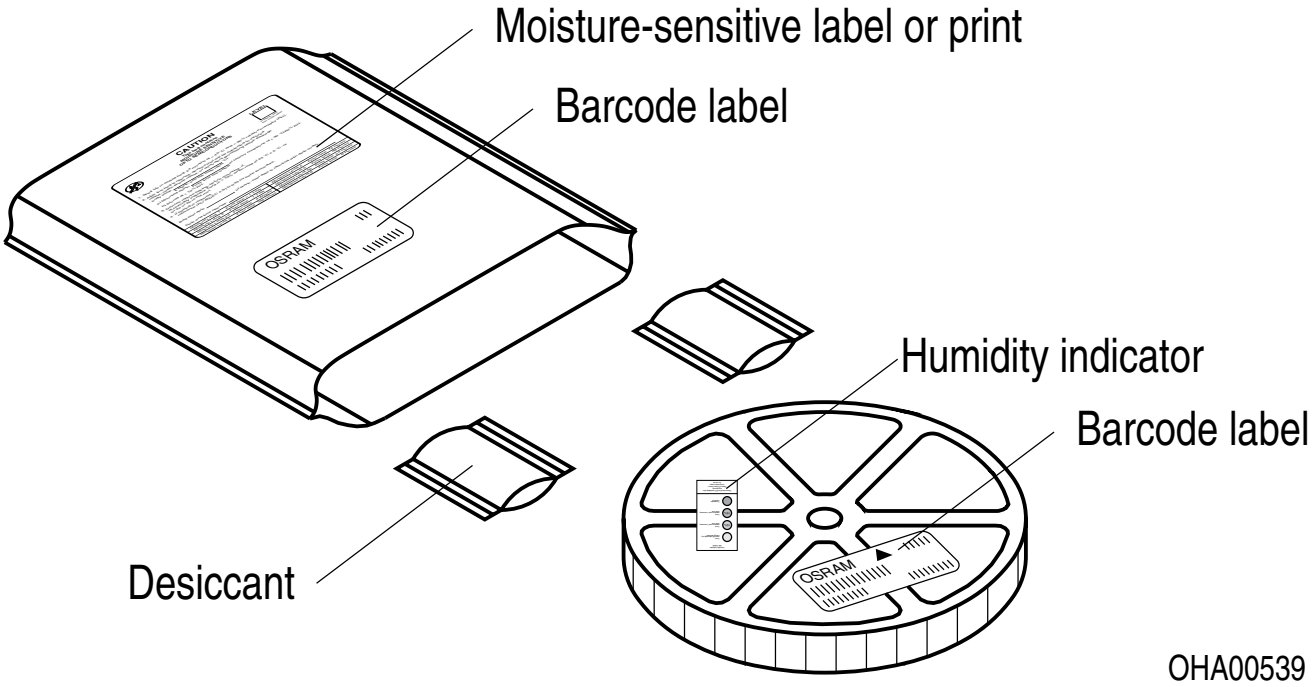

OHA00539

Moisture-sensitive product is packed in a dry bag containing desiccant and a humidity card according JEDEC-STD-033.

Notes

The evaluation of eye safety occurs according to the standard IEC 62471:2006 (photo biological safety of lamps and lamp systems). Within the risk grouping system of this IEC standard, the device specified in this data sheet falls into the class **exempt group (exposure time 10000 s)**. Under real circumstances (for exposure time, conditions of the eye pupils, observation distance), it is assumed that no endangerment to the eye exists from these devices. As a matter of principle, however, it should be mentioned that intense light sources have a high secondary exposure potential due to their blinding effect. When looking at bright light sources (e.g. headlights), temporary reduction in visual acuity and afterimages can occur, leading to irritation, annoyance, visual impairment, and even accidents, depending on the situation.

Subcomponents of this device contain, in addition to other substances, metal filled materials including silver. Metal filled materials can be affected by environments that contain traces of aggressive substances. Therefore, we recommend that customers minimize device exposure to aggressive substances during storage, production, and use. Devices that showed visible discoloration when tested using the described tests above did show no performance deviations within failure limits during the stated test duration. Respective failure limits are described in the IEC60810.

This device is designed for specific/recommended applications only. Please consult OSRAM Opto Semiconductors Sales Staff in advance for detailed information on other non-recommended applications (e.g. automotive).

Change management for this component is aligned with the requirements of the lighting market.

For further application related information please visit www.osram-os.com/appnotes

Disclaimer

Attention please!
The information describes the type of component and shall not be considered as assured characteristics. Terms of delivery and rights to change design reserved. Due to technical requirements components may contain dangerous substances.
For information on the types in question please contact our Sales Organization.
If printed or downloaded, please find the latest version on the OSRAM OS website.

Packing
Please use the recycling operators known to you. We can also help you – get in touch with your nearest sales office. By agreement we will take packing material back, if it is sorted. You must bear the costs of transport. For packing material that is returned to us unsorted or which we are not obliged to accept, we shall have to invoice you for any costs incurred.

Product and functional safety devices/applications or medical devices/applications
OSRAM OS components are not developed, constructed or tested for the application as safety relevant component or for the application in medical devices.
OSRAM OS products are not qualified at module and system level for such application.

In case buyer – or customer supplied by buyer – considers using OSRAM OS components in product safety devices/applications or medical devices/applications, buyer and/or customer has to inform the local sales partner of OSRAM OS immediately and OSRAM OS and buyer and /or customer will analyze and coordinate the customer-specific request between OSRAM OS and buyer and/or customer.

Glossary

1) **Brightness:** Brightness values are measured during a current pulse of typically 10 ms, with a tolerance of +/- 7%.

2) **Reverse Operation:** This product is intended to be operated applying a forward current within the specified range. Applying any continuous reverse bias or forward bias below the voltage range of light emission shall be avoided because it may cause migration which can change the electro-optical characteristics or damage the LED.

3) **Wavelength:** The wavelength is measured at a current pulse of typically 10 ms, with a tolerance of ± 0.5 nm.

4) **Forward Voltage:** The Forward voltage is measured during a current pulse duration of typically 1 ms with a tolerance of ± 0.05V .

5) **Typical Values:** Due to the special conditions of the manufacturing processes of semiconductor devices, the typical data or calculated correlations of technical parameters can only reflect statistical figures. These do not necessarily correspond to the actual parameters of each single product, which could differ from the typical data and calculated correlations or the typical characteristic line. If requested, e.g. because of technical improvements, these typ. data will be changed without any further notice.

6) **Characteristic curve:** In the range where the line of the graph is broken, you must expect higher differences between single devices within one packing unit.

7) **Tolerance of Measure:** Unless otherwise noted in drawing, tolerances are specified with ±0.1 and dimensions are specified in mm.

8) **Tape and Reel:** All dimensions and tolerances are specified acc. IEC 60286-3 and specified in mm.

Revision History

Version	Date	Change
1.12	2019-03-22	New Layout Features Ordering Information
1.13	2020-02-06	Features Ordering Information Schematic Transportation Box Dimensions of Transportation Box
1.14	2020-11-18	Applications

Published by OSRAM Opto Semiconductors GmbH
Leibnizstraße 4, D-93055 Regensburg
www.osram-os.com © All Rights Reserved.

EU RoHS and China RoHS compliant product

此产品符合欧盟 RoHS 指令的要求；
按照中国的相关法规和标准，不含有毒有害物质或元素。

OSRAM
Opto Semiconductors