REV.	ECN NO.	DATE	SIGN	DESCRIPTION

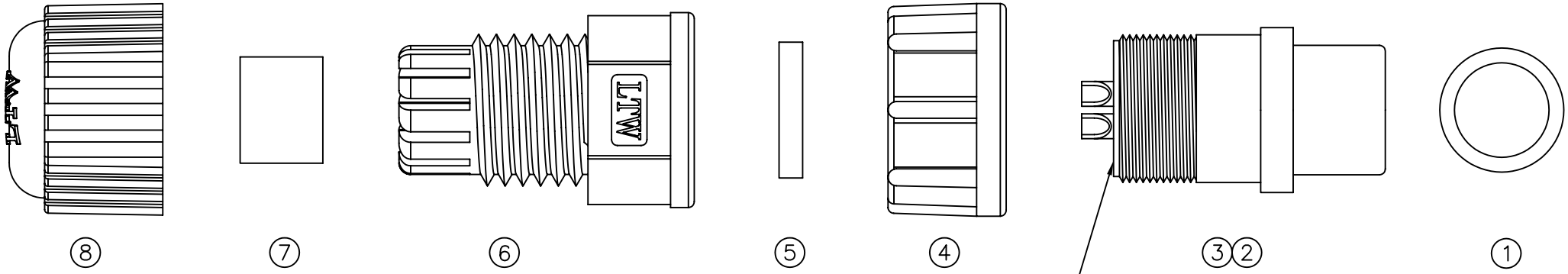

With Liquid Glue ⑩
點 防 水 膠

LTW
機密文件
2005.06.10
工程部

Note:
1. Seals for Cable OD:ø4.5mm~ø6.5mm
(防水墊圈線徑：ø4.5mm~ø6.5mm)
2. One Set Unassembled in One PE Bag
(每一組未組裝, 放置於一個 PE 袋, 并封口)
3. QC Important Dimension.
(QC為重點檢驗尺寸)

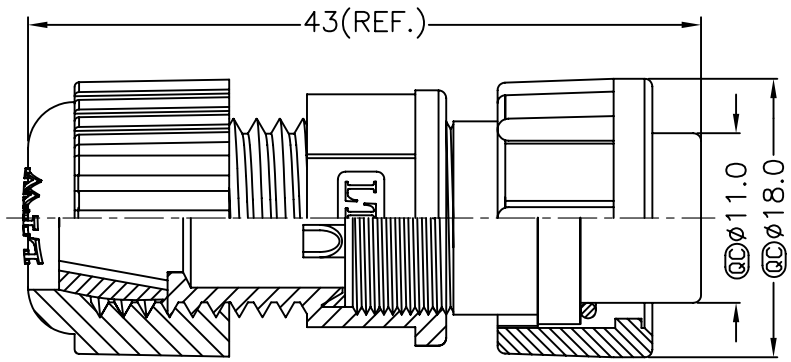

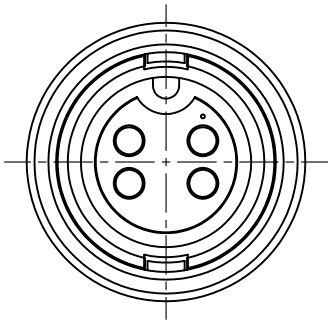

Pin Assignments
Front View 前視圖

NO.	NAME	COLOR	SPECIFICATION	QTY	NOTE
10	Liquid Glue				LIQ-002
9	PE Bag			1	HPE00900085
8	Sealing Nut	Black	Nylon	1	ANC223XXX01
7	Seals	Black	EPDM	1	DGA0064EP70
6	Clamp Ring	Black	Nylon	1	ANC224XXX01
5	Gasket	Black	EPDM	1	DGA0063EP70
4	Lock Nut	Black	Nylon+GF	1	ANB130XXX01
3	Male Pin		Brass 6u" Gold Plated Solder Type(5A)	4	BAB0069G□06
2	Connector	Black	4Pin Female,Nylon+GF	1	ANB161A0401
1	O-ring	Black	EPDM	1	D□R0011EP70

UNIT:mm

TOLERANCE ±0.5 mm

TITLE 4Pin Female Connector Male Pin for Field Installation,Lock Type

SCALE Free | SHEET 1 OF 1

REV. A | SIZE A4 | QC :Inspection Item

LTW
亮泰企業股份有限公司

ITEM NO		DRAWN BY Zhuting	DATE 2005/06/08
DWG NO LTWBD-04BFMA-LL7001		CHECKED BY Liu yanzhi	DATE 2005/06/09
CUSTOMER		APPROVED BY Tako Lu	DATE 2005/06/10

THIS INFORMATION IS CONFIDENTIAL AND IS DISCLOSED TO YOU ON CONDITION THAT NO FURTHER DISCLOSURE IS MADE BY YOU TO OTHER THAN LTW PERSONNEL WITHOUT AUTHORIZATION FROM LTW CORP.

FM-04-19-A2