REV	RESCRIPTION	DATE

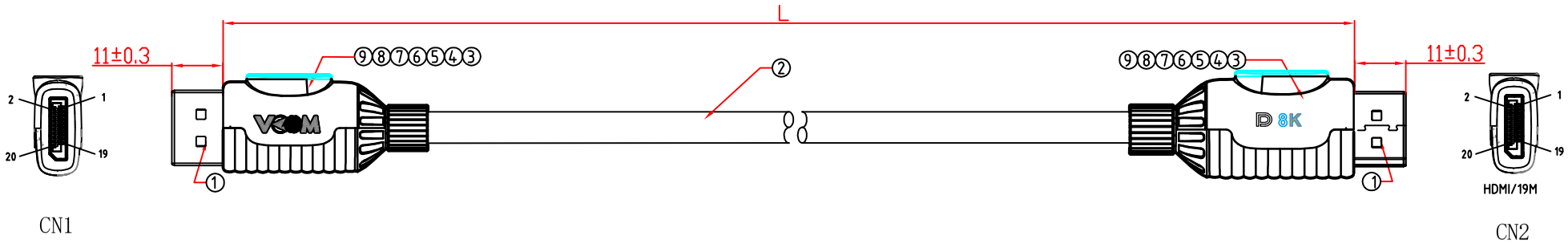

Wiring Diagram

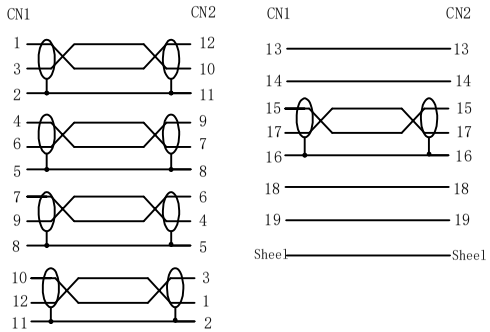

Figure No.	Length	Tolerance
CG634-0.5	500mm	±20
CG634-1.0	1000mm	±20
CG634-1.5	1500mm	±20
CG634-2.0	2000mm	±20

1.Electrical Testing
(1).100% open circuit, short circuit and misalignment test;
(2). Insulation impedance: DC voltage 300V impedance 10MΩMIN;
(3). Conduction impedance:5Ω;
(4). Hi-pot test: AC 200V/S,1mA ;
2.The products meet the requirements of ROHS, the company's environmental substance management standard.
3.100% Computer + display/TV 7680*4320/60HZ & 3840*2160/144HZ test .

NO	NAME	Material Description	Usage
⑨	SHELL	Gun black high-gloss zinc shell	2PCS
⑧	COPPER FOIL	Double-sided conductive copper foil	/m
⑦	SHIELDING SHELL	DP Lower shield shell	2PCS
⑥	SHIELDING SHELL	DP Upper shield shell	2PCS
⑤	COMPOUND	PVC 45P Black Compound	/KG
④	COMPOUND	PE Compound，Transparent color	/KG
③	WIRE CLIP	DP wire clip 30AWG Black PBT	2PCS
②	CABLE	（30AWG*1P+D+AL/ML)*5P+30AWG*4C+AL+D+B Black matte + black cotton mesh braid	/M
①	CONNECTOR	Gold-plated black rubber core in DP cardless iron case	2PCS

VCOM International Ltd.

TITLE	DP1.4V 20P A/M TO 20P A/M	CUSTOMER		UNIT	mm	PAGE:1of1
PART NO.		CUSTOMER NO.				
PRODUCT NO.	CG634	REV	A/0		DATE	2022-12-8
DRAWN BY:CHEN		CHECKED BY:		APPROVED BY:XIANG		