KEMET Part Number: C2225C153KHRACTU

(C2225C153KHRAC7800)

SMD Comm X7R HV, Ceramic, 0.015 uF, 10%, 3000 VDC, X7R, SMD, MLCC, High Voltage, Temperature Stable, 2225

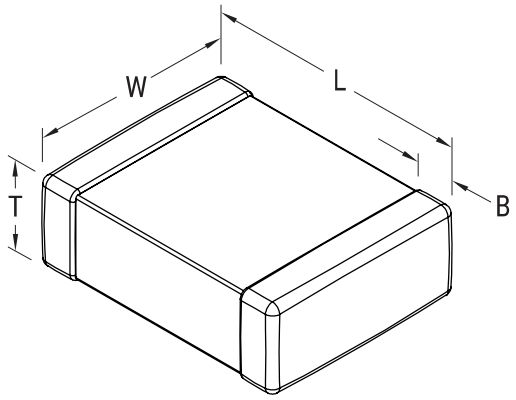

General Information	
Series:	SMD Comm X7R HV
Style:	SMD Chip
Description:	SMD, MLCC, High Voltage, Temperature Stable
Features:	High Voltage
RoHS:	Yes
Termination:	Tin
Marking:	No
AEC-Q200:	No
Miscellaneous:	Note: Referee time for X7R dielectric for this part number is 1000 hours
Shelf Life:	78 Weeks
MSL:	1

Dimensions	
Chip Size	2225
L	5.6mm +/-0.4mm
W	6.4mm +/-0.4mm
T	2.5mm +/-0.20mm
B	0.6mm +/-0.35mm

Packaging Specifications	
Packaging:	T&R, 180mm, Plastic Tape
Packaging Quantity:	500

Specifications	
Capacitance:	0.015 uF
Capacitance Tolerance:	10%
Voltage DC:	3000 VDC
Dielectric Withstanding Voltage:	3600 VDC
Temperature Range:	-55/+125°C
Temperature Coefficient:	X7R
Capacitance Change with Reference to +25°C and 0 VDC Applied (TCC):	15%, 1kHz 1.0Vrms
Dissipation Factor:	2.50% 1kHz 1.0Vrms
Aging Rate:	3% Loss/Decade Hour
Insulation Resistance:	66.667 GOhms

Statements of suitability for certain applications are based on our knowledge of typical operating conditions for such applications, but are not intended to constitute - and we specifically disclaim - any warranty concerning suitability for a specific customer application or use. This Information is intended for use only by customers who have the requisite experience and capability to determine the correct products for their application. Any technical advice inferred from this Information or otherwise provided by us with reference to the use of our products is given gratis, and we assume no obligation or liability for the advice given or results obtained.

© 2006 - 2019 KEMET