KEMET Part Number: C2220X333JDGACAUTO

SMD Auto C0G HV Flex, Ceramic, 0.033 uF, 5%, 1000 VDC, C0G, SMD, MLCC, FT-CAP, Ultra-Stable, Automotive Grade, 2220

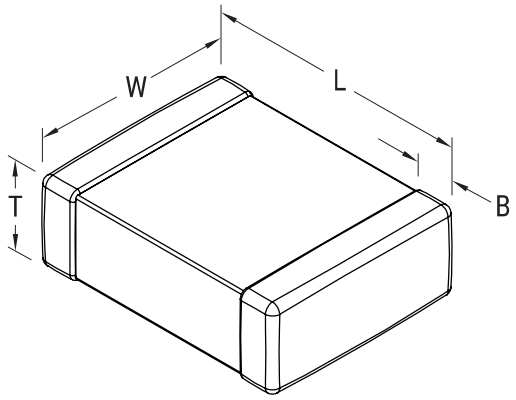

General Information	
Series:	SMD Auto C0G HV Flex
Style:	SMD Chip
Description:	SMD, MLCC, FT-CAP, Ultra-Stable, Automotive Grade
Features:	FT-CAP, Ultra-Stable, Automotive Grade
RoHS:	Yes
Termination:	Flexible Termination
Marking:	No
Qualifications:	AEC-Q200
AEC-Q200:	Yes
Shelf Life:	78 Weeks
MSL:	1

Dimensions	
Chip Size	2220
L	5.9mm +/-0.75mm
W	5mm +/-0.4mm
T	2.5mm +/-0.20mm
B	0.7mm +/-0.35mm

Packaging Specifications	
Packaging:	T&R, 180mm, Plastic Tape
Packaging Quantity:	500

Specifications	
Capacitance:	0.033 uF
Capacitance Tolerance:	5%
Voltage DC:	1000 VDC
Dielectric Withstanding Voltage:	1200 VDC
Temperature Range:	-55/+125°C
Temperature Coefficient:	C0G
Capacitance Change with Reference to +25°C and 0 VDC Applied (TCC):	30 ppm/C, 1kHz 1.0Vrms
Dissipation Factor:	0.10% 1kHz 1.0Vrms
Aging Rate:	0% Loss/Decade Hour
Insulation Resistance:	30.303 GOhms

Statements of suitability for certain applications are based on our knowledge of typical operating conditions for such applications, but are not intended to constitute - and we specifically disclaim - any warranty concerning suitability for a specific customer application or use. This Information is intended for use only by customers who have the requisite experience and capability to determine the correct products for their application. Any technical advice inferred from this Information or otherwise provided by us with reference to the use of our products is given gratis, and we assume no obligation or liability for the advice given or results obtained.

© 2006 - 2019 KEMET