KEMET Part Number: C1812X473JBGACAUTO

SMD Auto C0G HV Flex, Ceramic, 0.047 uF, 5%, 630 VDC, C0G, SMD, MLCC, FT-CAP, Ultra-Stable, Automotive Grade, 1812

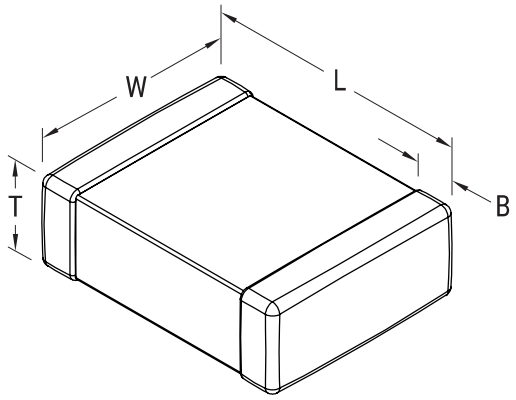

General Information	
Series:	SMD Auto C0G HV Flex
Style:	SMD Chip
Description:	SMD, MLCC, FT-CAP, Ultra-Stable, Automotive Grade
Features:	FT-CAP, Ultra-Stable, Automotive Grade
RoHS:	Yes
Termination:	Flexible Termination
Marking:	No
Qualifications:	AEC-Q200
AEC-Q200:	Yes
Shelf Life:	78 Weeks
MSL:	1

Dimensions	
Chip Size	1812
L	4.5mm +/-0.4mm
W	3.2mm +/-0.3mm
T	2.5mm +/-0.20mm
B	0.7mm +/-0.35mm

Packaging Specifications	
Packaging:	T&R, 180mm, Plastic Tape
Packaging Quantity:	500

Specifications	
Capacitance:	0.047 uF
Capacitance Tolerance:	5%
Voltage DC:	630 VDC
Dielectric Withstanding Voltage:	819 VDC
Temperature Range:	-55/+125°C
Temperature Coefficient:	C0G
Capacitance Change with Reference to +25°C and 0 VDC Applied (TCC):	30 ppm/C, 1kHz 1.0Vrms
Dissipation Factor:	0.10% 1kHz 1.0Vrms
Aging Rate:	0% Loss/Decade Hour
Insulation Resistance:	21.277 GOhms

Statements of suitability for certain applications are based on our knowledge of typical operating conditions for such applications, but are not intended to constitute - and we specifically disclaim - any warranty concerning suitability for a specific customer application or use. This Information is intended for use only by customers who have the requisite experience and capability to determine the correct products for their application. Any technical advice inferred from this Information or otherwise provided by us with reference to the use of our products is given gratis, and we assume no obligation or liability for the advice given or results obtained.

© 2006 - 2019 KEMET