嘉尼企業股份有限公司CANAL ELECTRONIC CO.,LTD.

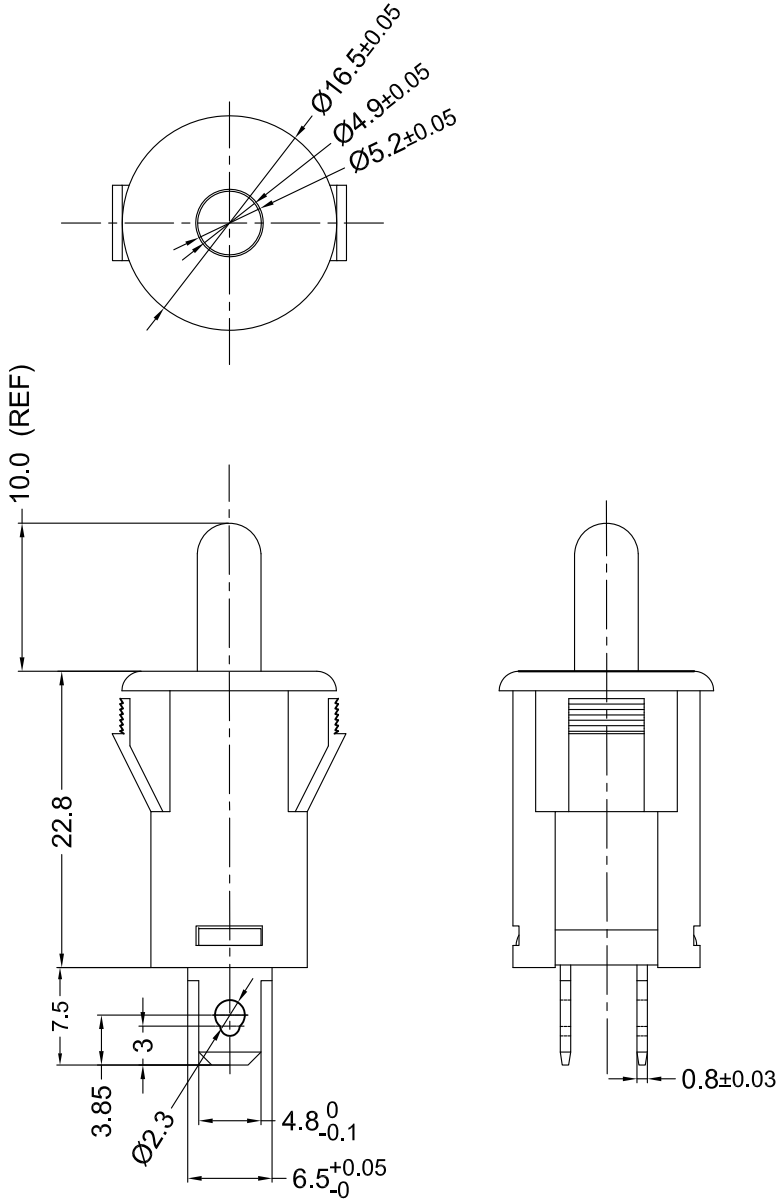

SPECIFICATION MODEL:ADP SERIES

RATING:12A GP 125/250VAC T105 (cURus/ENEC15/KC)
DIELECTRIC WITHSTAND VOLTAGE:1000VAC FOR 1 MINUTE
INSULATION RESISTANCE:500VDC 100MΩ (MIN.)
CONTACT RESISTANCE: 20mΩ INITIAL (MAX.)

嘉尼工程
2024.08.13
文件管制章

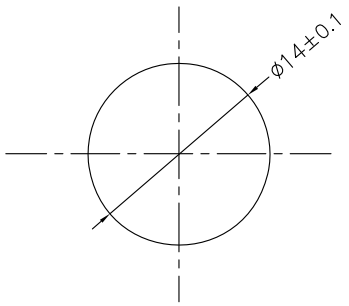

PANEL CUTOUT DIMENSION TABLE

NOTE: TOLERANCES UNLESS OTHERWISE SPECIFIED: ± .012/0.3 (in/mm)

REVISION	DESCRIPTION	REVISED BY	TOLERANCES				ANGLE ½°	UNIT	mm	PART NAME	ADP SPEC DRAWING	DWG NO
4			DRAWN BY	奚康平	DESIGNED BY	奚康平	SCALE	2/1				S9374A
3												
2			CHECKED BY	奚康平	APPROVED BY	郑仁海	DATE	2022.06.01		PART NO	ADP-141A1-BBA	
1 2024.03.04	首次出圖	奚康平										