used for: D-SUB HD

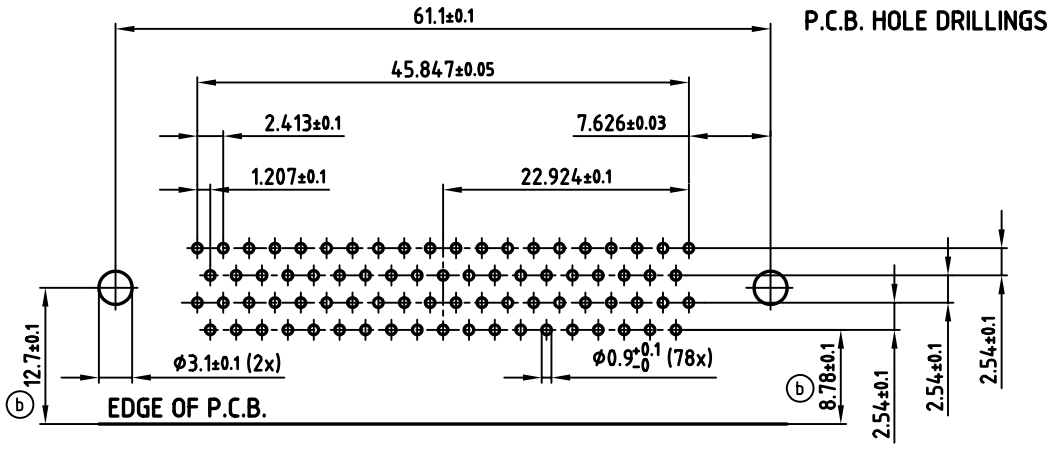

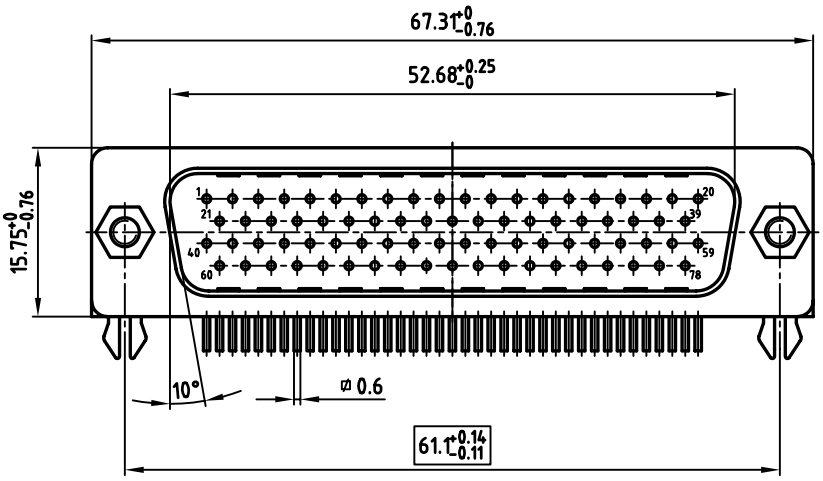

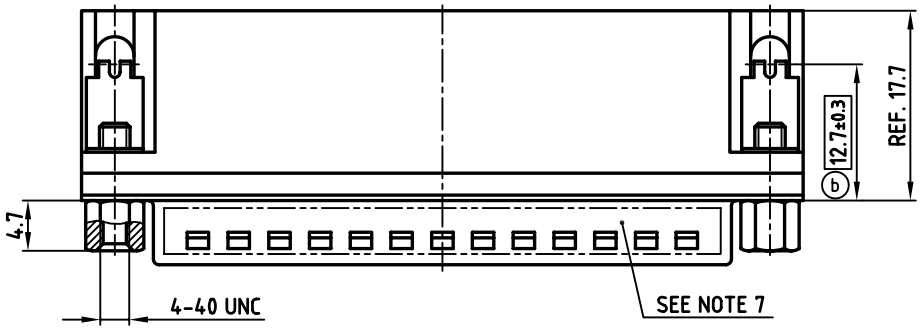

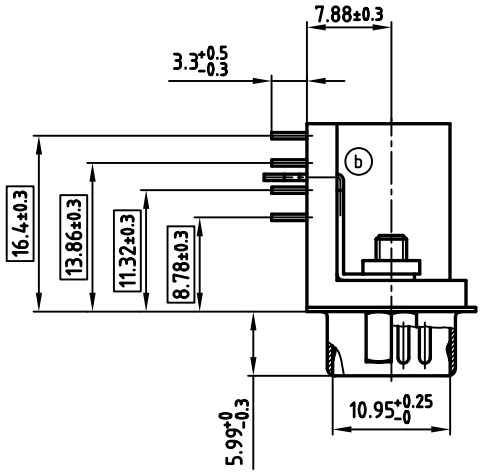

NOTES:

1. METALSHELLS: STEEL; min. 320µ" TIN
2. INSULATORS: PBT GF UL 94 V-0, BLACK
3. CONTACTS: COPPER ALLOY
   PLATING: min. 8µ" HARD GOLD OVER min. 50µ" NICKEL
4. THREADED INSERT: COPPER ALLOY; min. 200µ" TIN over 80µ" NICKEL
5. PCB-SNAP: COPPER ALLOY; min. 200µ" TIN over 80µ" NICKEL
   PCB-HOLE: ⌀3.1±0.1; PCB THICKNESS 1.6mm
6. MAXIMUM TORQUE VALUE FOR THREAD: 6" LBS
7. CONNECTOR IS PART MARKED: 301A11369X CONEC Y/WW
8. [ ] = CRITICAL DIMENSION

Directive 2002/95/EC „RoHS" Compliant

APPROVAL # FREIGABE # DEBLOCAGE # AUTOR/ZACION # APPROVAL

CUSTOMER APPROVAL DATE:

NAME: TITLE:

COMPANY NAME:

APPROVAL # FREIGABE # DEBLOCAGE # AUTOR/ZACION # APPROVAL

THIS DRAWING MAY NOT BE COPIED OR REPRODUCED IN ANY WAY, AND MAY NOT BE PASSED ON TO A THIRD PARTY WITHOUT WRITTEN PERMISSION. OWNERSHIP AND COPYRIGHT OF CONEC GmbH

DO NOT ALTER CAD DRAWING BY HAND

rev.	description	date	name
4 x b	Ä 2158	09.02.2005	Lehmen

tolerance

2002	date	name
drawn	14.08.	Parei
appd.	14.08.	Mickenbecker
norm		
d-old		

CONEC®

scale: 2:1

material: SEE NOTES

title:

D-SUB HD MALE 90°

78pos. SOLDER PIN ANGLED 0.314inch
with threaded insert, clip and hex screw

dwg no: 16K1A732

AutoCAD 2000 | DIN-A 3 | sh: 1/1

part no: 301A11369X