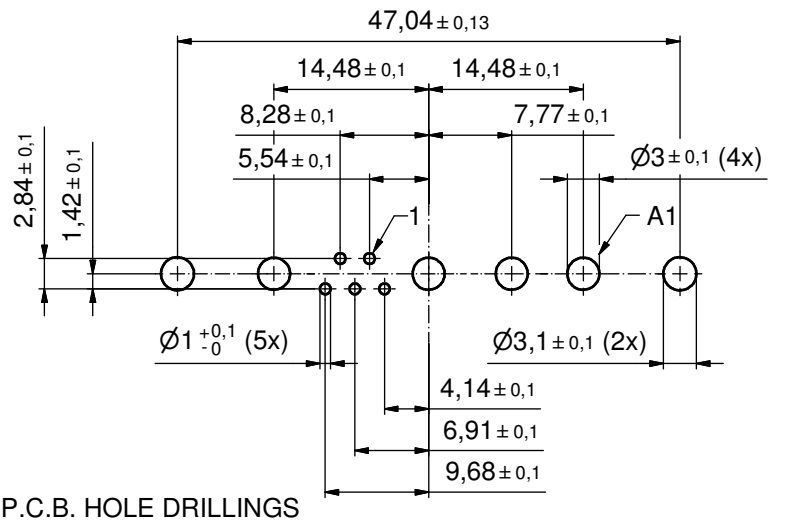

P.C.B. HOLE DRILLINGS
(P.C.B. TOP SIDE)

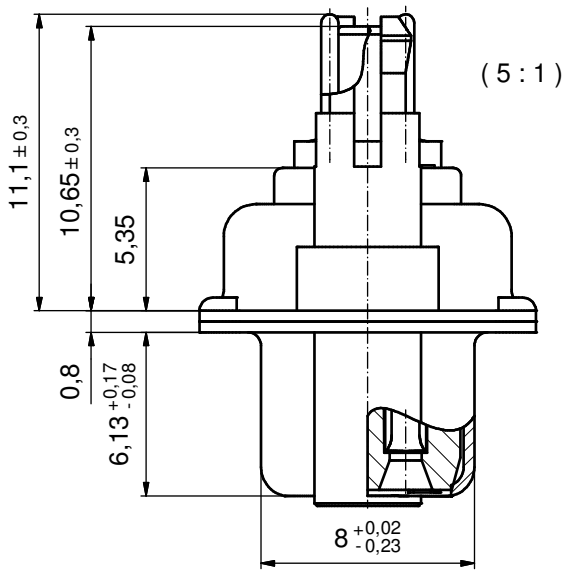

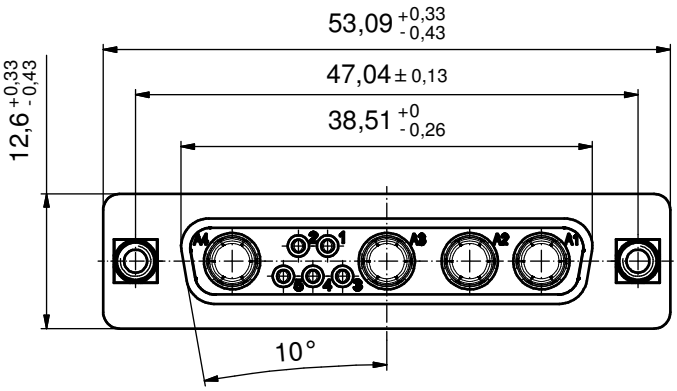

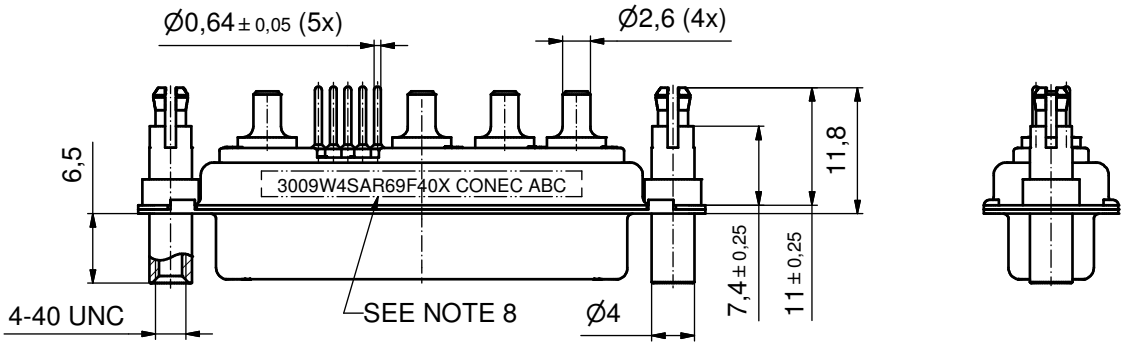

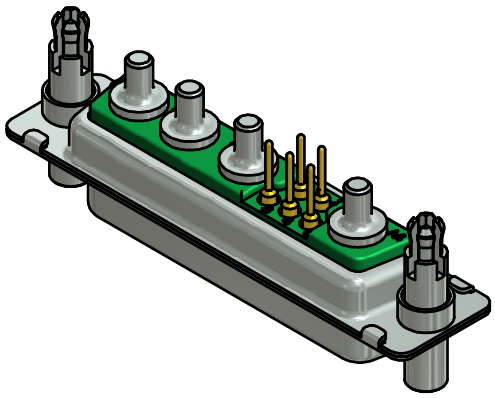

NOTES:

1. METALSHELLS: STEEL; min. 315µin TIN over 40-80µin NICKEL
2. INSULATORS: PBT GF UL 94 V-0, GREEN
3. SIGNAL CONTACTS: COPPER ALLOY
   PLATING: GOLD FLASH over NICKEL
4. HIGH POWER CONTACTS 20A: COPPER ALLOY
   PLATING, MATING AREA: GOLD FLASH over NICKEL
   PLATING, TERMINATION SIDE: 160-240µin TIN over 80µin NICKEL
5. THREADED LOCKS AND SPACER CLIPS: COPPER ALLOY; min. 200µin TIN over 80µin NICKEL
   PCB-HOLE: ⌀3,1± 0,1mm; PCB-THICKNESS: 2,3mm
6. COLLARS: COPPER ALLOY; min. 200µin TIN over 80µin NICKEL
7. MAXIMUM TORQUE VALUE FOR THREAD: 6 in.LB
8. CONNECTOR IS PART MARKED: 3009W4SAR69F40X CONEC ABC

Directive 2002/95/EC RoHS compliant

THIS DRAWING MAY NOT BE COPIED OR REPRODUCED IN ANY WAY, AND MAY NOT BE PASSED ON TO A THIRD PARTY WITHOUT WRITTEN PERMISSION. OWNERSHIP AND COPYRIGHT OF CONEC GmbH

DO NOT ALTER CAD DRAWING BY HAND

rev.	description	date	name
a	Original		

tolerance — dim. in mm

	date	name
drawn	09.07.14	Henneboel
appd.	09.07.14	Lehmenkühler
norm		
d-old		

CONEC®

scale: 2:1 (5:1)
material: see notes

title:
D-SUB COMBINATION FEMALE
9W4S
with threaded lock and spacer clip

dwg no: 13K1A4718
DIN-A3
sh: 1

part no: 3009W4SAR69F40X