used for: D-SUB COMBINATION

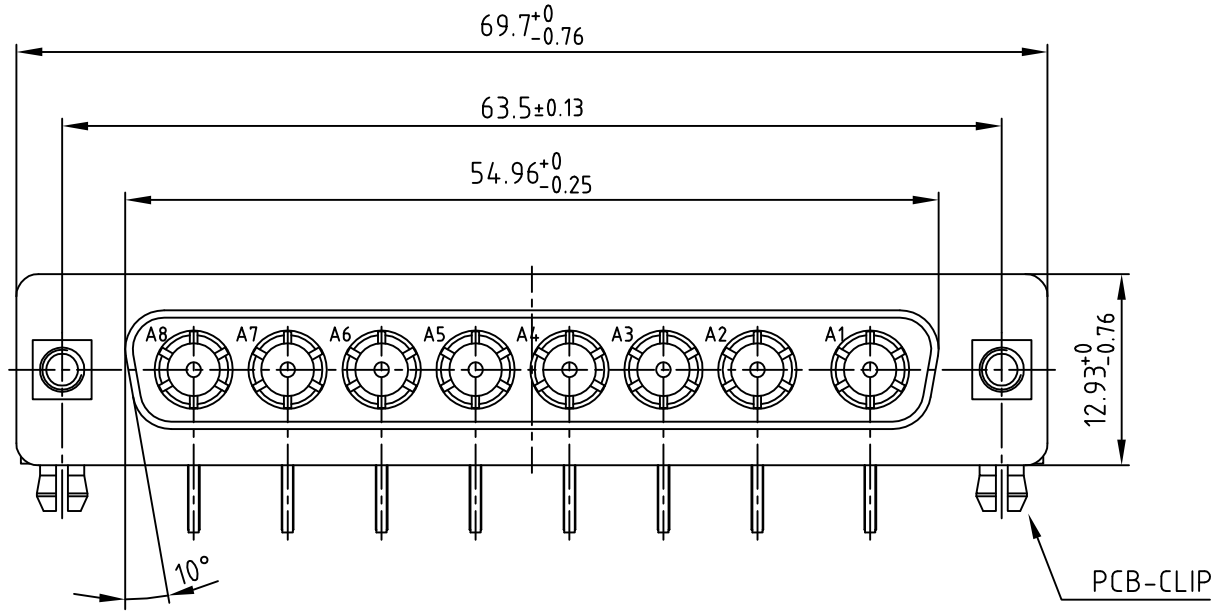

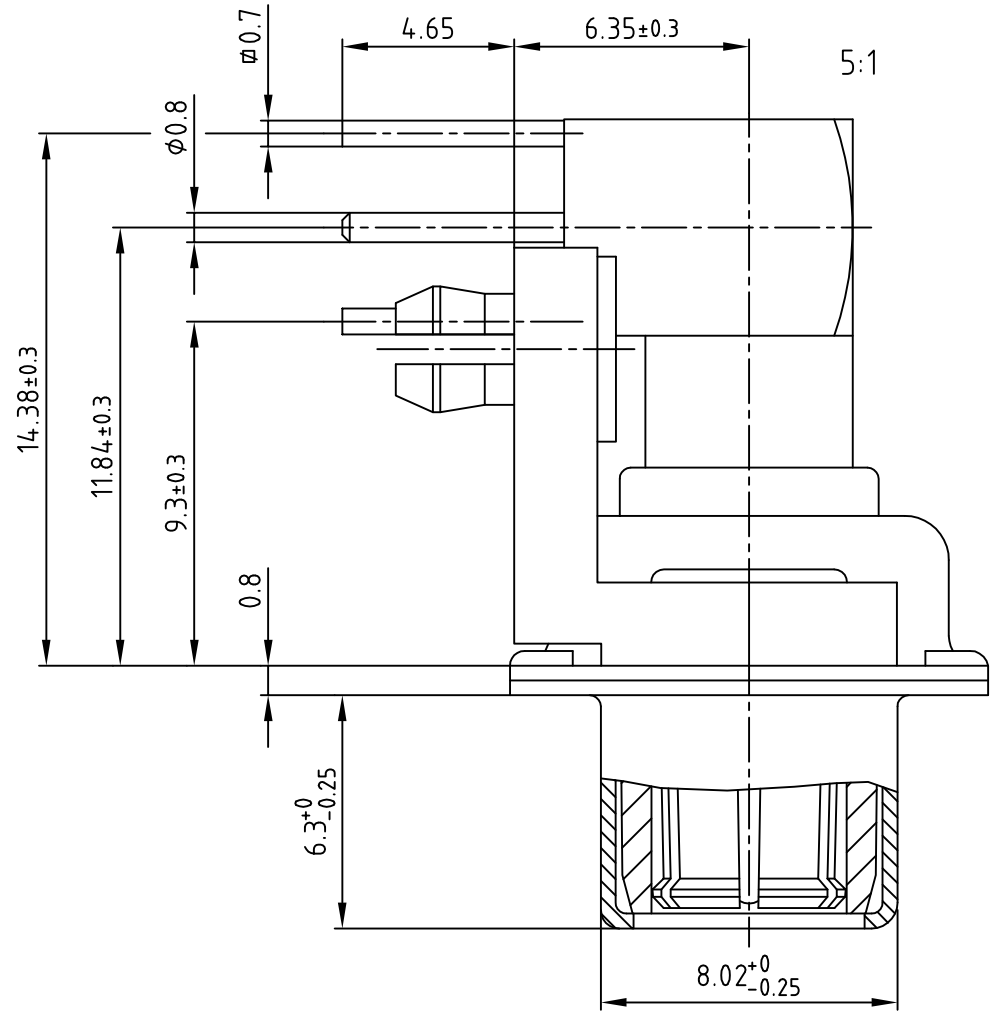

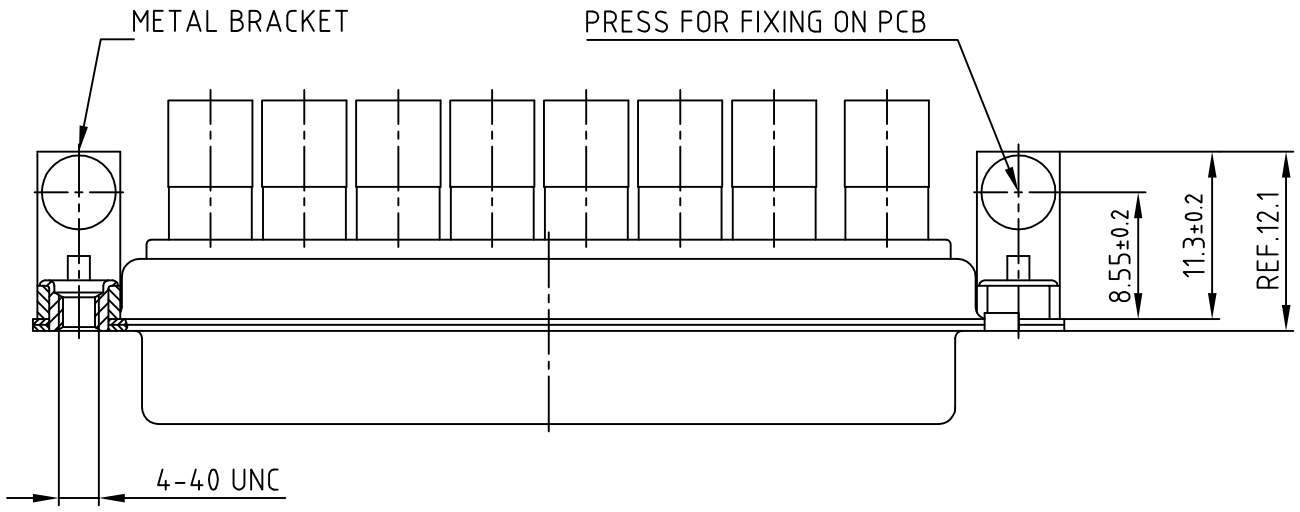

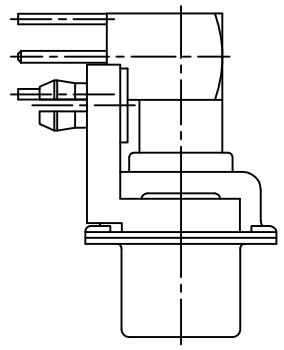

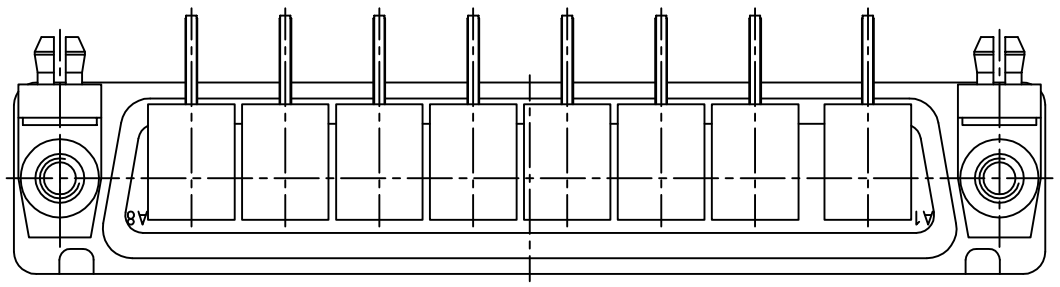

NOTES:

1. METALSHELLS: STEEL; min. 320µin TIN
2. INSULATORS: PBT GF UL 94 V-0; GREEN
3. COAXIAL CONTACTS 50 OHM: COPPER ALLOY
4. PLATING: INNER CONDUCTOR: min. 50µin HARD GOLD over min. 50µin NICKEL
   OUTER CONDUCTOR: min. 30µin HARD GOLD over min. 50µin NICKEL
5. METAL BRACKETS: STEEL; min. 320µin TIN over 80µin NICKEL
6. THREADED INSERTS: COPPER ALLOY; min. 200µin TIN over 80µin NICKEL
7. PCB-SNAPS: COPPER ALLOY; min. 200µin TIN over 80µin NICKEL
   PCB-HOLE: ⌀3.1±0.1; PCB THICKNESS 1.6mm
8. P.C.B. HOLE DRILLINGS ON SHEET 2
9. MAXIMUM TORQUE VALUE FOR THREAD: 6 in.LB

Directive 2002/95/EC RoHS compliant

THIS DRAWING MAY NOT BE COPIED OR REPRODUCED IN ANY WAY, AND MAY NOT BE PASSED ON TO A THIRD PARTY WITHOUT WRITTEN PERMISSION. OWNERSHIP AND COPYRIGHT OF CONEC GmbH

DO NOT ALTER CAD DRAWING BY HAND

rev.	description	date	name

tolerance

2001	date	name
drawn	27.08.	Parei
appd.	27.08.	E. Mickenbecker
norm		
d-old		

CONEC®

scale: 2:1 (5:1)

material: SEE NOTES

title:

D-SUB COMBINATION FEMALE 90°
8W8S
with threaded insert, metal bracket and clip

dwg no: 13K1A328A

AutoCAD 2000 | DIN-A 3 | sh:1/2

part no: 3008W8SXX78N40X