used for: D-SUB COMBINATION

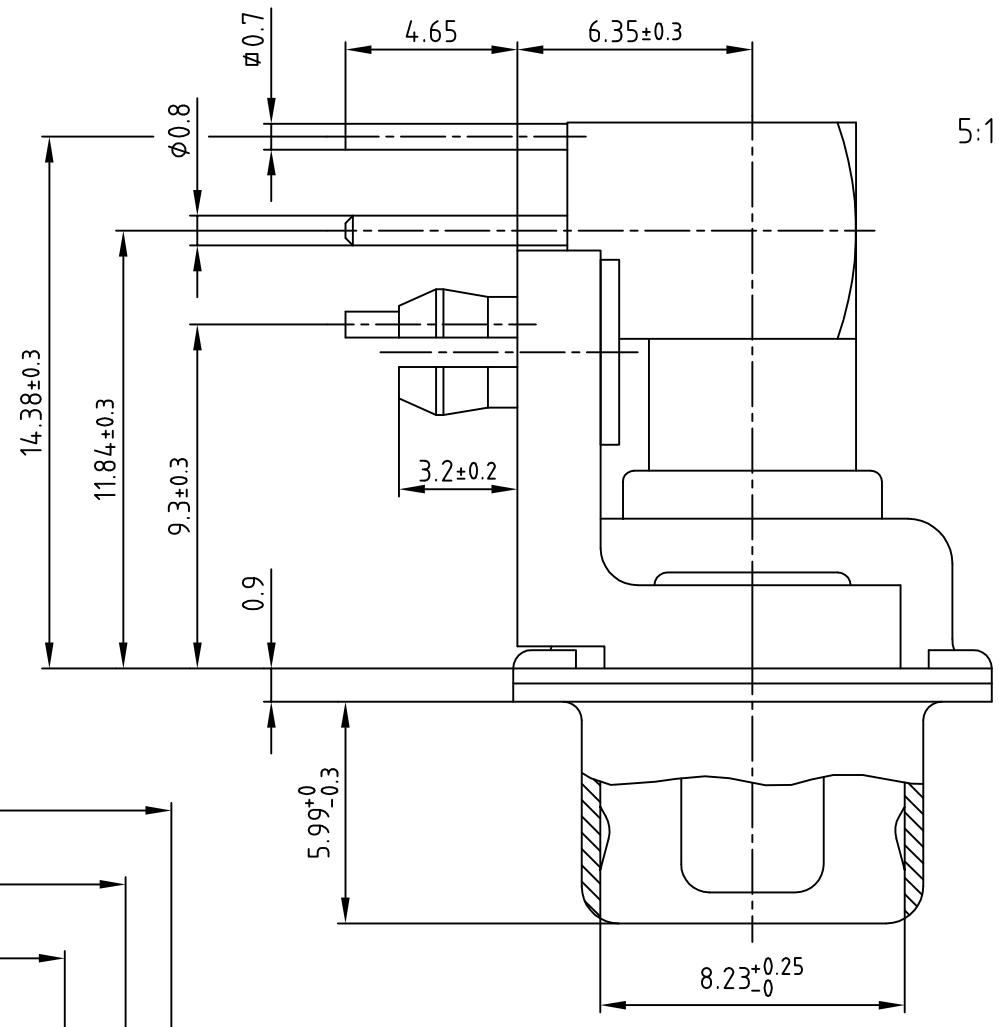

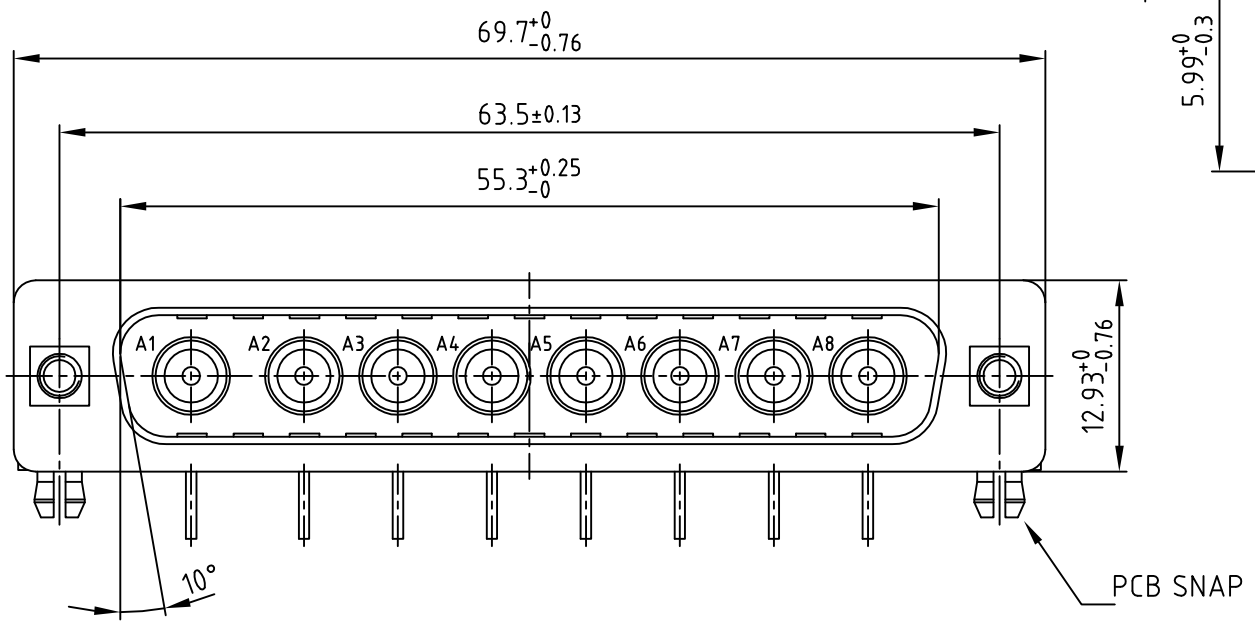

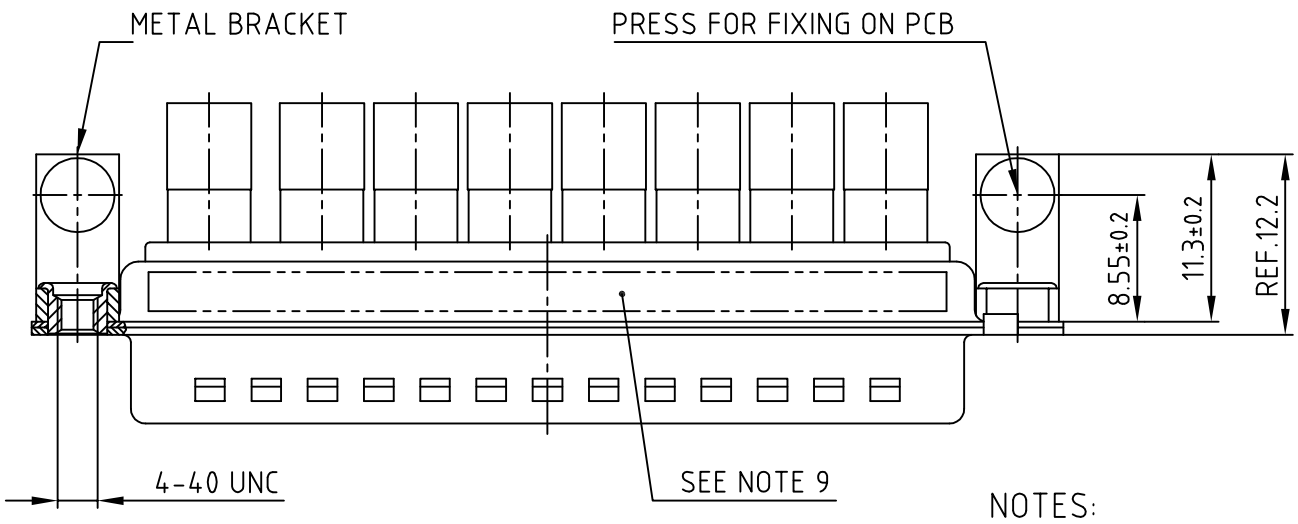

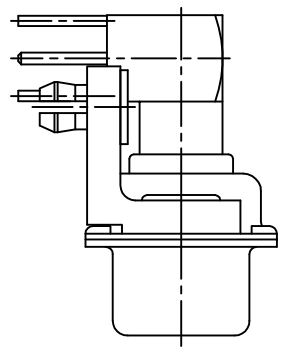

NOTES:

1. METALSHELLS: STEEL; min. 320µin TIN
2. INSULATORS: PBT GF UL 94 V-0, GREEN
3. COAXIAL CONTACTS 50 OHM: COPPER ALLOY
   PLATING INNER CONNECTOR: 50µin HARD GOLD over min. 50µin NICKEL
   PLATING OUTER CONNECTOR: 30µin HARD GOLD over min. 50µin NICKEL
4. METAL BRACKET: STEEL; min. 320µin TIN over 80µin NICKEL
5. THREADED INSERT: COPPER ALLOY; min. 200µin TIN over 80µin NICKEL
6. PCB-SNAP: COPPER ALLOY; min. 200µin TIN over 80µin NICKEL
   PCB-HOLE: ⌀3.1±0.1; PCB THICKNESS 1.6mm
7. P.C.B. HOLE DRILLINGS ON SHEET 2
8. MAXIMUM TORQUE VALUE FOR THREAD: 6 in.LB
9. CONNECTOR IS PART MARKED: 3008W8PXX78N40X CONEC ABC

Directive 2002/95/EC RoHS compliant

APPROVAL # FREIGABE # DEBLOCAGE # AUTORIZACION # APPROVAL

CUSTOMER APPROVAL DATE:

NAME: TITLE:

COMPANY NAME:

THIS DRAWING MAY NOT BE COPIED OR REPRODUCED IN ANY WAY, AND MAY NOT BE PASSED ON TO A THIRD PARTY WITHOUT WRITTEN PERMISSION. OWNERSHIP AND COPYRIGHT OF CONEC GmbH

DO NOT ALTER CAD DRAWING BY HAND

rev.	description	date	name

tolerance — dim. in mm

2004	date	name
drawn	17.03.	Lehmenkühler
appd.	17.03.	Mickenbecker
norm		
d-old		

CONEC®

scale: 2:1 (5:1)

material: SEE NOTES

title: D-SUB COMBINATION MALE 90°
8W8P
with threaded insert, metal bracket and clip

dwg no: 13K1A1077

AutoCAD 2000 | DIN-A 3 | sh:1/2

part no: 3008W8PXX78N40X

used for: D-SUB COMBINATION

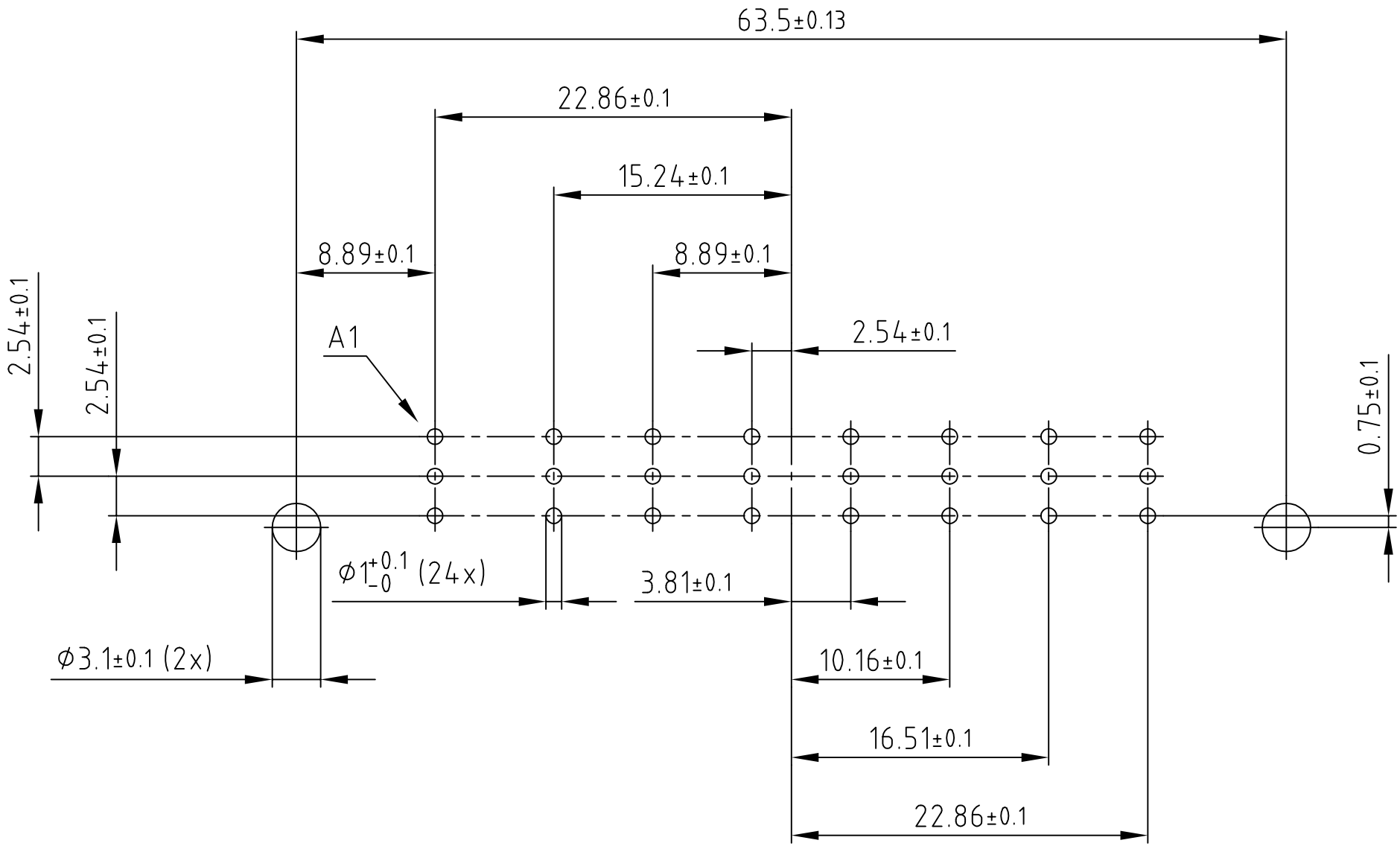

APPROVAL # FREIGABE # DEBLOCAGE # AUTORIZACION # APPROVAL

CUSTOMER APPROVAL DATE:

NAME: TITLE:

COMPANY NAME:

APPROVAL # FREIGABE # DEBLOCAGE # AUTORIZACION # APPROVAL

APPROVAL # FREIGABE # DEBLOCAGE # AUTORIZACION

APPROVAL # FREIGABE # DEBLOCAGE # AUTORIZACION

THIS DRAWING MAY NOT BE COPIED OR REPRODUCED IN ANY WAY, AND MAY NOT BE PASSED ON TO A THIRD PARTY WITHOUT WRITTEN PERMISSION. OWNERSHIP AND COPYRIGHT OF CONEC GmbH

DO NOT ALTER CAD DRAWING BY HAND

rev.	description	date	name

tolerance

dim. in mm

	date	name
2004		
drawn	17.03.	Lehmenkühler
appd.	17.03.	Mickenbecker
norm		
d-old		

CONEC®

scale: 2:1

material: SEE SHEET 1

title:

P.C.B. HOLE DRILLINGS

D-SUB COMBINATION MALE 90° 8W8P

with threaded insert, metal bracket and clip

dwg no: 13K1A1077

AutoCAD 2000

DIN-A 4

sh:2/2

part no: SEE SHEET 1