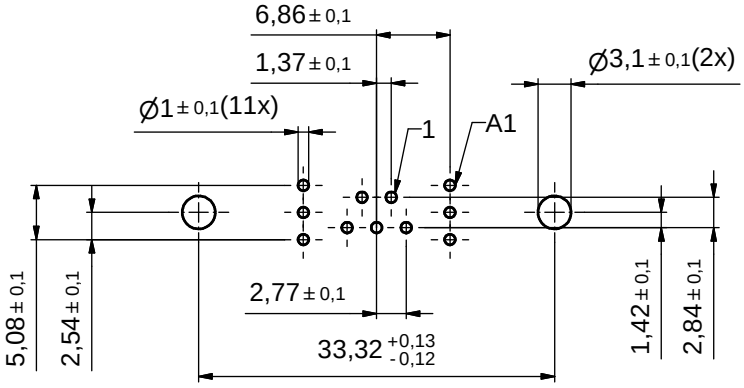

P.C.B. HOLE DRILLINGS

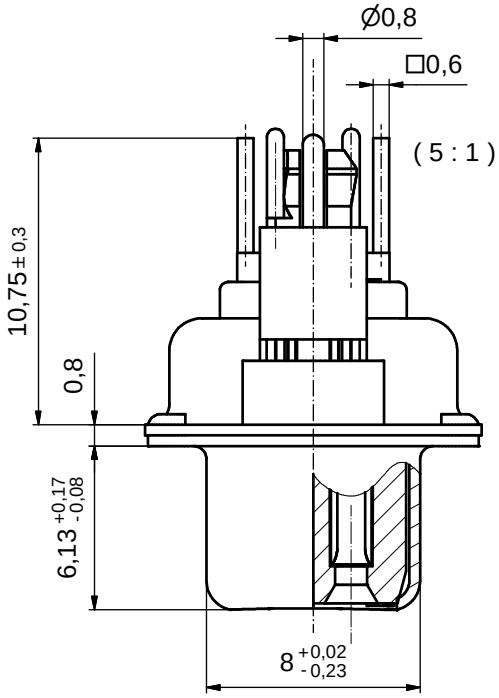

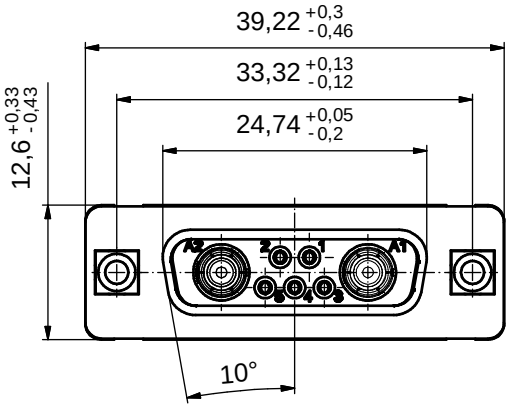

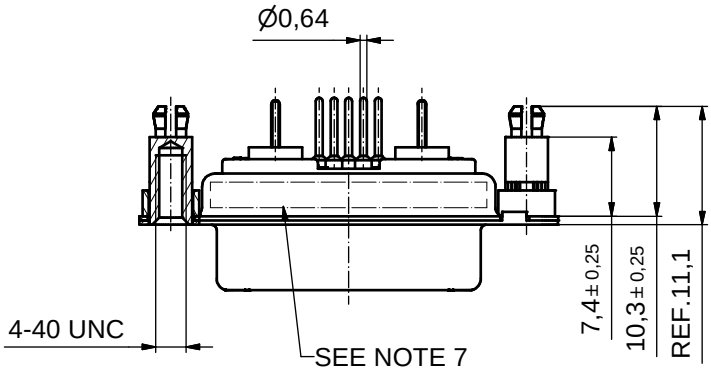

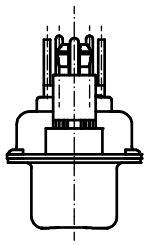

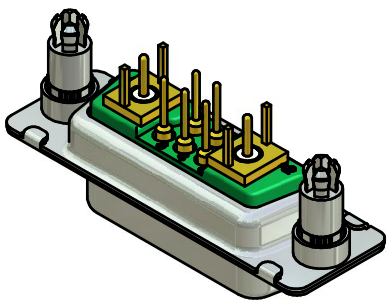

Directive 2002/95/EC „RoHS" Compliant

NOTES:

1. METALSHELLS: STEEL; min. 315µin TIN over 40-80µin NICKEL
2. INSULATORS: PBT GF UL 94 V-0, GREEN
3. SIGNAL CONTACTS: COPPER ALLOY
   PLATING: 8µin HARD GOLD over min.. 50µin NICKEL
4. COAXIAL CONTACTS 50 OHM: COPPER ALLOY
   PLATING INNER CONNECTOR: 50µin HARD GOLD over min. 50µin NICKEL
   PLATING OUTER CONNECTOR: 30µin HARD GOLD over 50µin NICKE
5. THREADED SPACER CLIP: COPPER ALLOY; min. 200µin TIN over 80µin NICKEL
   PCB-HOLE: ⌀3.1 ± 0.1; PCB THICKNESS 1,6mm
6. MAXIMUM TORQUE VALUE FOR THREAD: 6 in.LB
7. CONNECTOR IS PART MARKED: 3007W2SAR76E20X_CONEC_ABC

APPROVAL # FREIGABE # DEBLOCAGE # AUTORIZACION # APPROVAL

CUSTOMER APPROVAL DATE:

NAME: TITLE:

COMPANY NAME:

APPROVAL # FREIGABE # DEBLOCAGE # AUTORIZACION # APPROVAL

THIS DRAWING MAY NOT BE COPIED OR REPRODUCED IN ANY WAY, AND MAY NOT BE PASSED ON TO A THIRD PARTY WITHOUT WRITTEN PERMISSION. OWNERSHIP AND COPYRIGHT OF CONEC GmbH

DO NOT ALTER CAD DRAWING BY HAND

rev.	description	date	name
a	Origin		

tolerance — dim. in mm

	date	name
drawn	29.08.2007	Sonnenberg
appd.	29.08.2007	Mickenbecker
norm		
d-old		

CONEC

scale: 2:1 (5:1)

material: SEE NOTES

title: D-SUB COMBINATION FEMALE
7W2S
with threaded spacer clip

dwg no: 13K1A2220

Inventor 10

DIN-A3

sh: 1

part no: 3007W2SAR76E20X