© – TE Connectivity. All Rights Reserved.

REVISIONS					
P	LTR	DESCRIPTION	DATE	DWN	APVD
	J	REVISED ECN-23-236356	26oct2023	GSK	MD

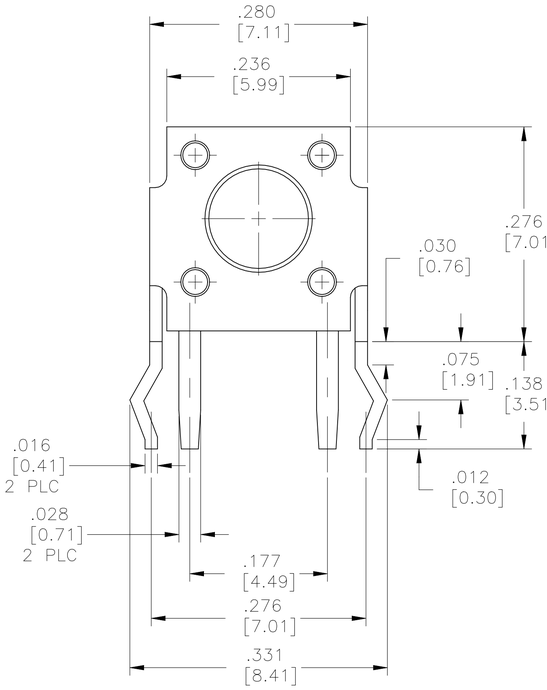

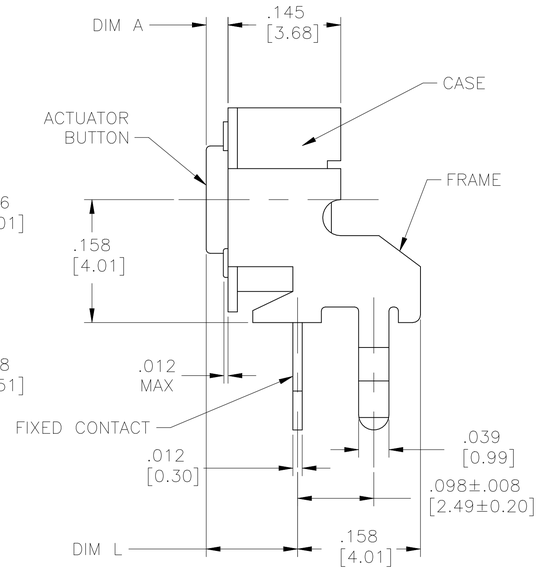

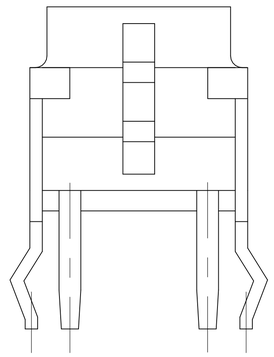

CASE: NYLON 6/6, BLACK
FRAME/BRACKET: STEEL, TIN OVER NICKEL
ACTUATOR BUTTON: PBT OR NYLON 6/6 (SEE TABLE), UL94HB, COLOR SEE TABLE
MOVING CONTACT: COPPER ALLOY, SILVER PLATE
FIXED CONTACT/TERMINALS: COPPER ALLOY, SILVER OVER NICKEL PLATE

ELECTRICAL:
MAX CONTACT RATING: 50MILLIAMPS@24V DC
MIN CONTACT RATING: 10MICROAMPS@1V DC
INITIAL CONTACT RESISTANCE: 100 MILLIOHMS MAX
INSULATION RESISTANCE: 100 MEGOHMS @ 100 VDC MIN.
DIELECTRIC STRENTGH: 500 VAC 50/60 Hz FOR 1 MINUTE
LIFE EXPECTANCY: 100,000 CYCLES

MECHANICAL:
ACTUATION FORCE: SEE TABLE
ACTUATION TRAVEL: $.010^{+.008}_{-.004}$ $[0.25^{+0.2}_{-0.1}]$

ENVIRONMENTAL:
OPERATING TEMPERATURE: −40°C TO 105°C.
STORAGE TEMPERATURE: −40°C TO 100°C
SOLDER HEAT RESISTANCE PER 109−202, CONDITION B
SOLDERABILITY PER EIA−364−52 CLASS II, CATEGORY 1

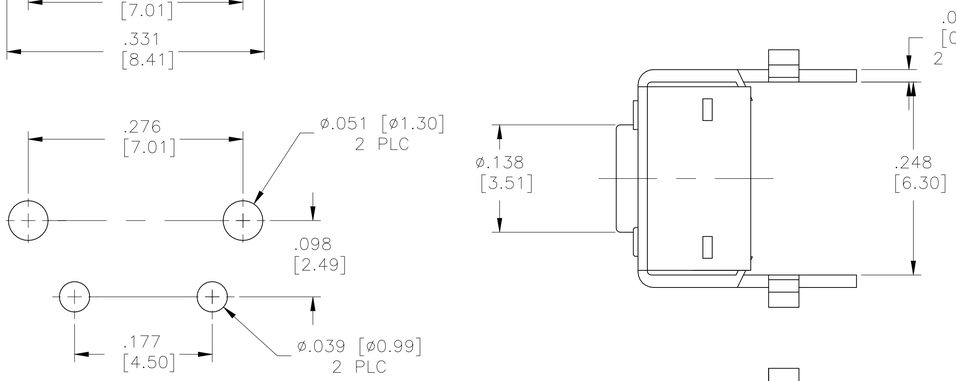

RECOMMENDED HOLE LAYOUT
TOLERANCE ±.002 UNLESS
OTHERWISE NOTED

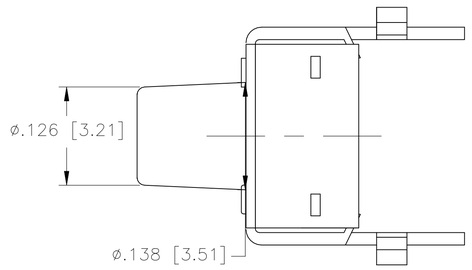

FSMRA5J

1 ALL MATERIALS AND FINISHES SHALL COMPLY WITH EH DIRECTIVE 2002/95/EC OF 27 JAN 2003 (ROHS)

	ACTUATOR MAT'L	ACTUATOR COLOR	ACTUATION FORCE	DIM L	DIM A	ALCO P/N	PART NO
	NYLON 6/6	RED	260 +/−50 GF	.624 (15.85)	.522 (13.25)	FSMRA8JHA	2-1825027-4
	NYLON 6/6	BLACK	160 +/−50 GF	.624 (15.85)	.522 (13.25)	FSMRA8JH	2-1825027-3
OBSOLETE	NYLON 6/6	BROWN	100 +/−30 GF	.624 (15.85)	.522 (13.25)	FSMRA8JHL	2-1825027-2
OBSOLETE	NYLON 6/6	RED	260 +/−50 GF	.467 (11.85)	.364 (9.24)	FSMRA7JHA	2-1825027-1
	NYLON 6/6	BLACK	160 +/−50 GF	.467 (11.85)	.364 (9.24)	FSMRA7JH	2-1825027-0
OBSOLETE	NYLON 6/6	BROWN	100 +/−30 GF	.467 (11.85)	.364 (9.24)	FSMRA7JHL	1-1825027-9
OBSOLETE	NYLON 6/6	RED	260 +/−50 GF	.270 (6.85)	.167 (4.24)	FSMRA6JHA	1-1825027-8
	NYLON 6/6	WHITE	160 +/−50 GF	.270 (6.85)	.167 (4.24)	FSMRA6JH	1-1825027-7
OBSOLETE	NYLON 6/6	BROWN	100 +/−30 GF	.270 (6.85)	.167 (4.24)	FSMRA6JHL	1-1825027-6
OBSOLETE	NYLON 6/6	RED	260 +/−50 GF	.242 (6.15)	.140 (3.55)	FSMRA5JHA	1-1825027-5
	NYLON 6/6	IVORY	160 +/−50 GF	.242 (6.15)	.140 (3.55)	FSMRA5JH	1-1825027-4
OBSOLETE	NYLON 6/6	BROWN	100 +/−30 GF	.242 (6.15)	.140 (3.55)	FSMRA5JHL	1-1825027-3
	PBT	RED	260 +/−50 GF	.329 (8.35)	.226 (5.74)	FSMRA4JHA	1-1825027-2
	PBT	BLACK	160 +/−50 GF	.329 (8.35)	.226 (5.74)	FSMRA4JH	1-1825027-1
OBSOLETE	PBT	BROWN	100 +/−30 GF	.329 (8.35)	.226 (5.74)	FSMRA4JHL	1-1825027-0
OBSOLETE	NYLON 6/6	RED	260 +/−50 GF	.230 (5.85)	.128 (3.25)	FSMRA3JHA	1825027-9
	NYLON 6/6	BLUE	160 +/−50 GF	.230 (5.85)	.128 (3.25)	FSMRA3JH	1825027-8
OBSOLETE	NYLON 6/6	BROWN	100 +/−30 GF	.230 (5.85)	.128 (3.25)	FSMRA3JHL	1825027-7
	PBT	RED	260 +/−50 GF	.152 (3.86)	.049 (1.24)	FSMRA2JHA	1825027-6
	PBT	BLACK	160 +/−50 GF	.152 (3.86)	.049 (1.24)	FSMRA2JH	1825027-5
	PBT	BROWN	100 +/−30 GF	.152 (3.86)	.049 (1.24)	FSMRA2JHL	1825027-4
	PBT	RED	260 +/−50 GF	.124 (3.15)	.022 (0.56)	FSMRA1JHA	1825027-3
	PBT	NATURAL	160 +/−50 GF	.124 (3.15)	.022 (0.56)	FSMRA1JH	1825027-2
	PBT	BROWN	100 +/−30 GF	.124 (3.15)	.022 (0.56)	FSMRA1JHL	1825027-1

( )−INDICATES MOMENTARY POSITION		
CIRCUIT CHARACTERISTICS		
CONTACT POSITION		CIRCUIT DIAGRAM
		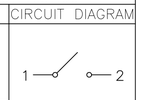
OFF	(ON) 1−2	

THIS DRAWING IS A CONTROLLED DOCUMENT.

DIMENSIONS: INCHES [mm]

TOLERANCES UNLESS OTHERWISE SPECIFIED:
0 PLC ± –
1 PLC ± –
2 PLC ± –
3 PLC ± .012[0.30]
4 PLC ± –
ANGLES ± –

MATERIAL 1
FINISH –

DWN M.BINNER 26OCT04
CHK M.SARVER 26OCT04
APVD M.SARVER 26OCT04
PRODUCT SPEC —
APPLICATION SPEC —
WEIGHT

TE Connectivity

NAME MICRO−MINIATURE PUSHBUTTON SWITCH

SIZE	CAGE CODE	DRAWING NO	RESTRICTED TO
A1	00779	C-1825027	—

CUSTOMER DRAWING | SCALE 10:1 | SHEET 1 OF 1 | REV J

4805 (1/15)