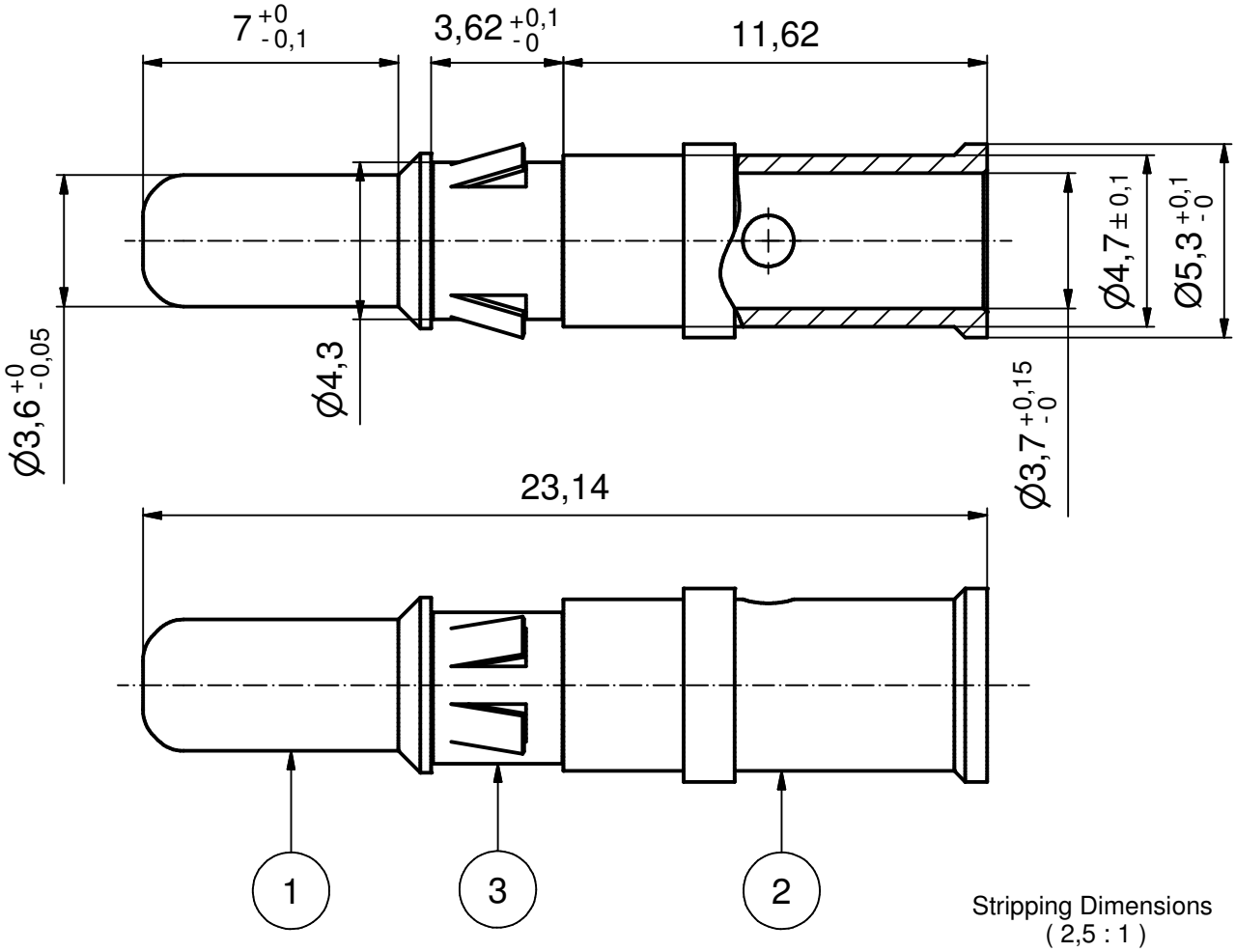

Stripping Dimensions
(2,5 : 1)

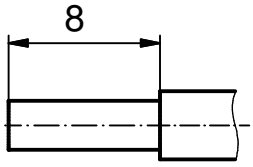

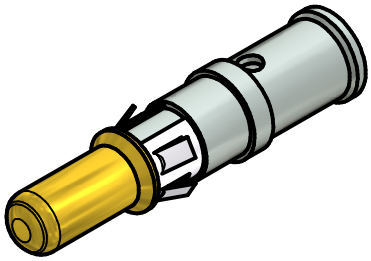

NOTES:

1. MATERIAL:
   ITEM 1 + 2: COPPER ALLOY
   ITEM 3: STAINLESS STEEL
2. PLATING, MATING AREA: GOLD FLASH over NICKEL
   PLATING, TERMINATION SIDE: 160-240µin TIN over 80µin NICKEL
3. CRIMPING: USE CRIMP TOOL 360X10409X
   WITH TOOL INSERT 360X20029X
   SELECTOR SETTINGS: 7 FOR AWG 10
   6 FOR AWG 12

RoHS compliant

THIS DRAWING MAY NOT BE COPIED OR REPRODUCED IN ANY WAY, AND MAY NOT BE PASSED ON TO A THIRD PARTY WITHOUT WRITTEN PERMISSION. OWNERSHIP AND COPYRIGHT OF CONEC GmbH

DO NOT ALTER CAD DRAWING BY HAND

rev.	description	date	name
a	Original		

tolerance

dim. in mm

	date	name
drawn	29.11.13	Strakerjahn
appd.	13.12.13	Koch
norm		
d-old	SK0521Z6	

CONEC®

scale: 5:1 (2,5:1)

material: see notes

title:
HIGH POWER CONTACT MALE
CRIMP VERSION 30A FOR AWG 10-12

dwg no: 17K1A433

DIN-A4

sh: 1

part no: 17-400253