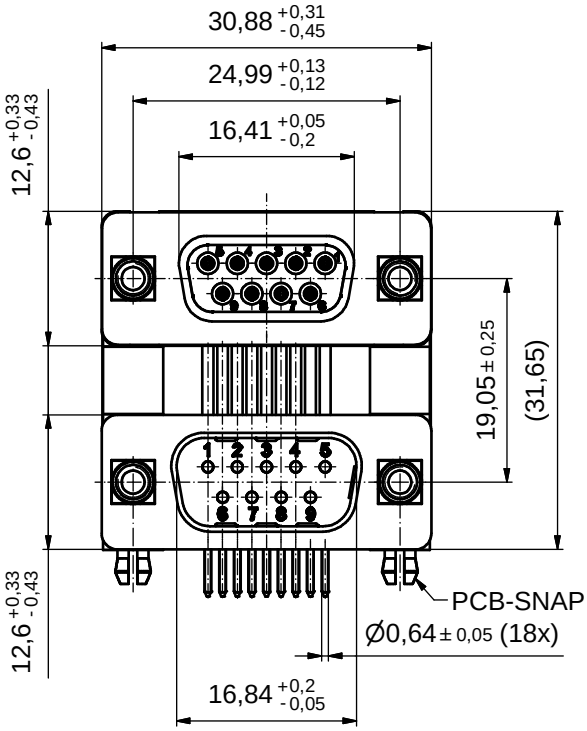

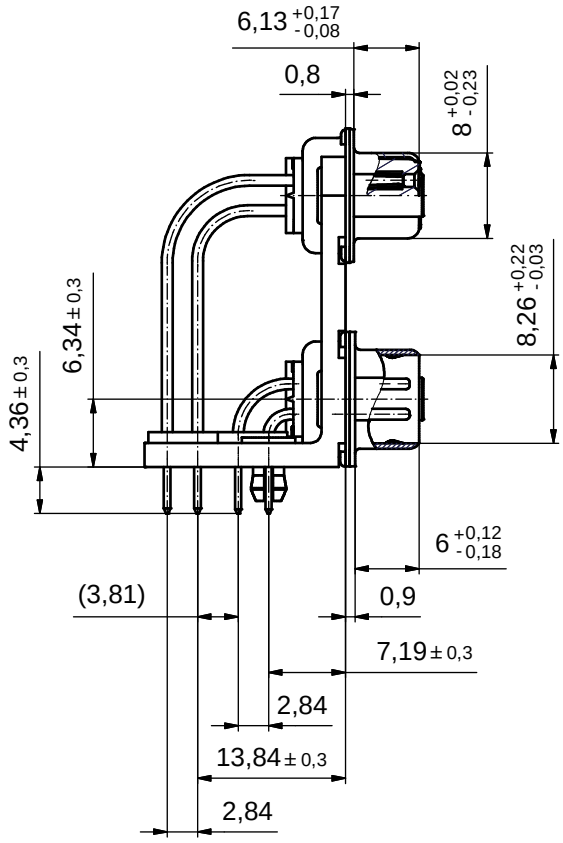

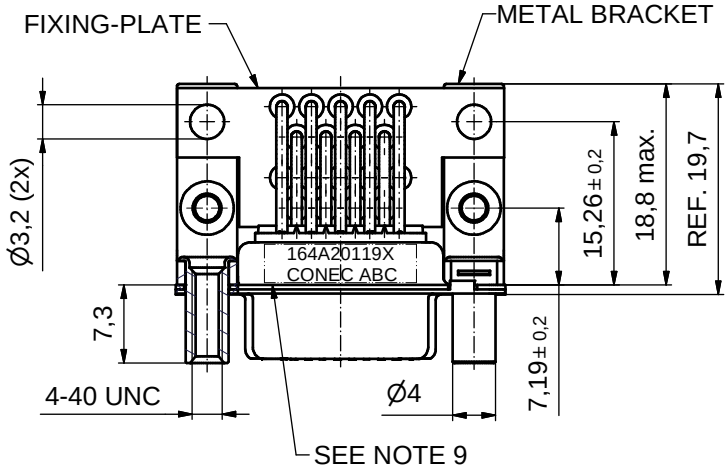

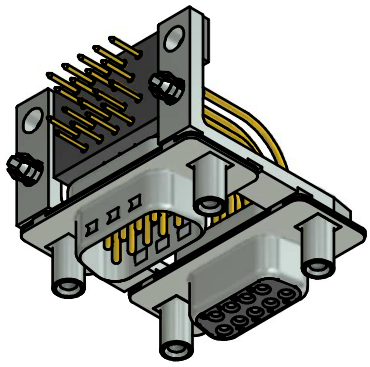

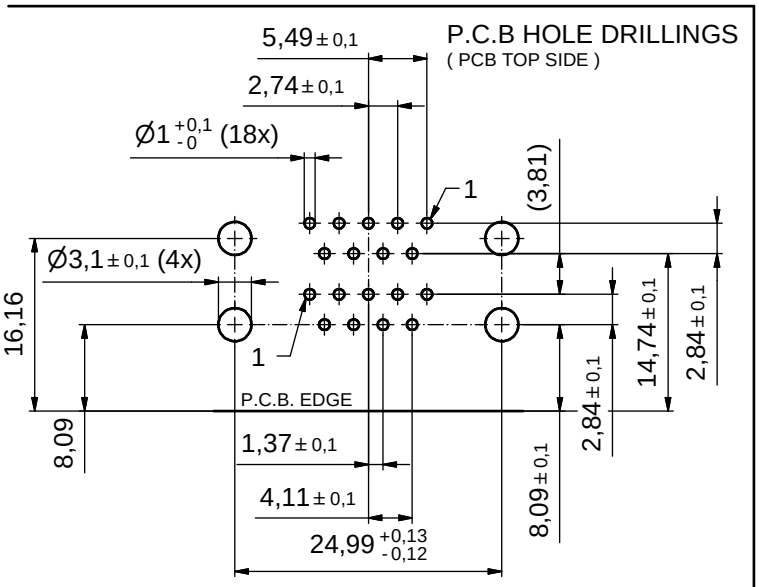

NOTES:

1. METALSHELLS: STEEL; min. 315µin TIN over 40-80µin NICKEL
2. INSULATORS: PBT GF UL 94 V-0, BLACK
3. CONTACTS: COPPER ALLOY
   PLATING: GOLD FLASH
4. METAL BRACKETS:
   ZINC DIE CAST; 300µin COPPER/40-120µin NICKEL/120-200µin TIN
5. THREADED LOCKS: COPPER ALLOY; min. 200µin TIN over 80µin NICKEL
6. FIXING PLATE: PBT GF UL 94 V-0, BLACK
7. PCB-SNAP: COPPER ALLOY; min. 200µin TIN over 80µin NICKEL
   PCB-HOLE: ⌀3,1± 0,1mm; PCB-THICKNESS: 1,6mm
8. MAXIMUM TORQUE VALUE FOR THREAD: 6 in.LB
9. CONNECTOR IS PART MARKED: 164A20119X CONEC ABC

Directive 2002/95/EC „RoHS" Compliant

APPROVAL # FREIGABE # DEBLOCAGE # AUTORIZACION # APPROVAL

CUSTOMER APPROVAL DATE:

NAME: TITLE:

COMPANY NAME:

APPROVAL # FREIGABE # DEBLOCAGE # AUTORIZACION # APPROVAL

THIS DRAWING MAY NOT BE COPIED OR REPRODUCED IN ANY WAY, AND MAY NOT BE PASSED ON TO A THIRD PARTY WITHOUT WRITTEN PERMISSION. OWNERSHIP AND COPYRIGHT OF CONEC GmbH

DO NOT ALTER CAD DRAWING BY HAND

rev.	description	date	name
a	Origin		

tolerance

dim. in mm

	date	name
drawn	15.09.10	Henneboel
appd.	15.09.10	Koch
norm		
d-old		

CONEC®

scale: 2:1

material: SEE NOTES

title: D-SUB DUAL PORT 19.05mm
9pos. FEMALE / 9pos. MALE
threaded lock,metal bracket,snap and fixing-plate

dwg no: 16K1A2693

Inventor

DIN-A3

sh: 1

part no: 164A20119X