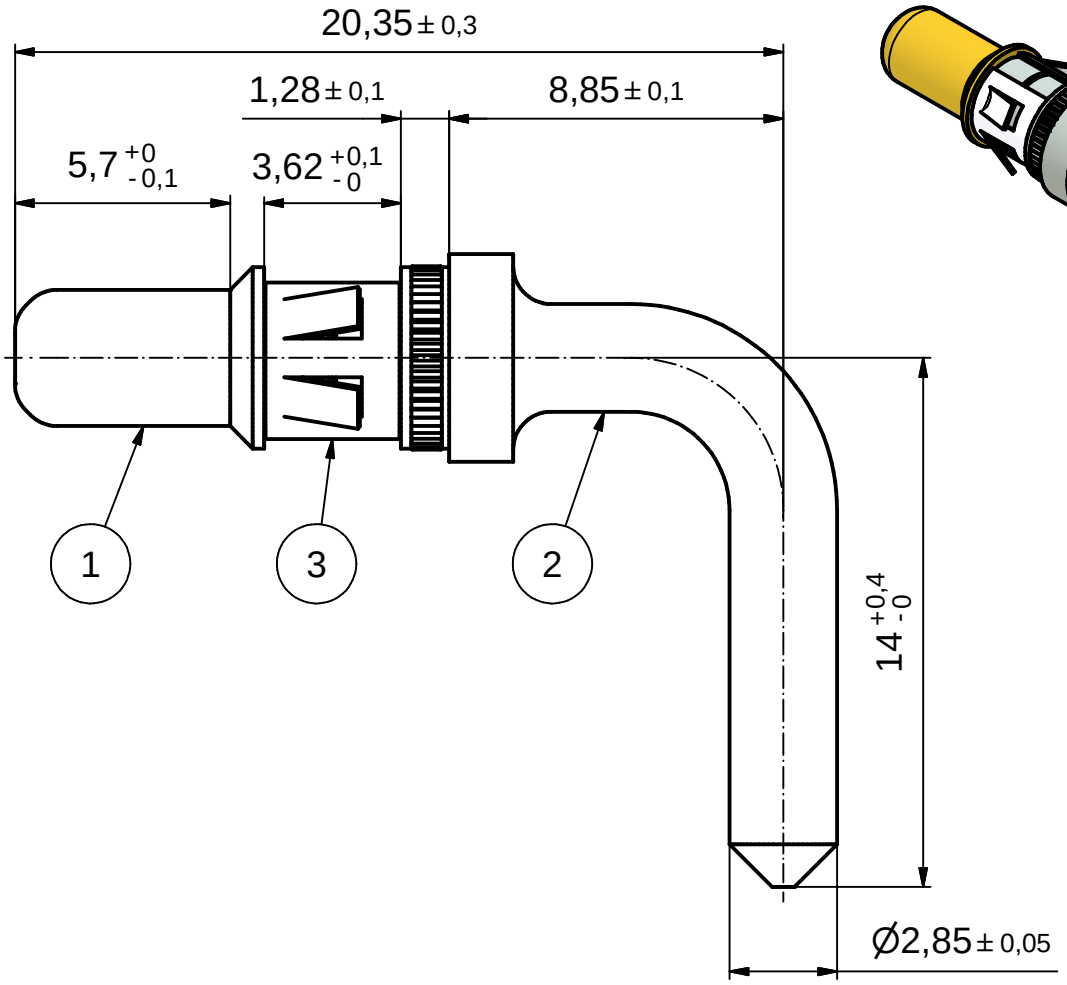


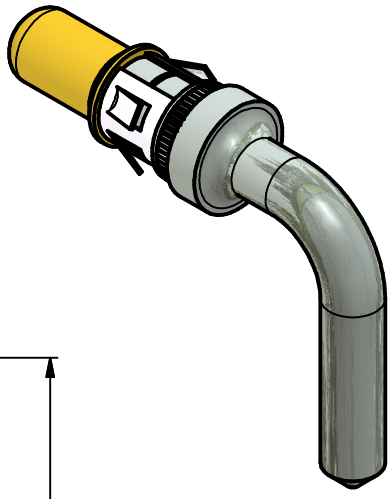

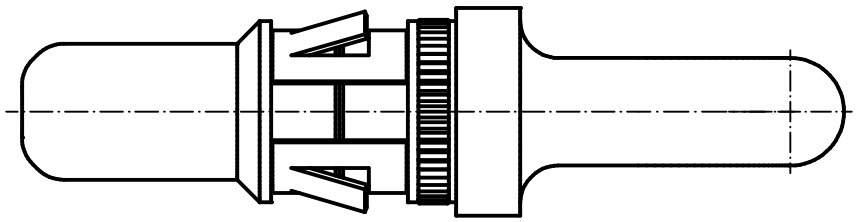

## NOTES:

1. MATERIAL:
   ITEM 1+2: COPPER ALLOY
   ITEM 3: STAINLESS STEEL
2. PLATING:
   ITEM 1: SEE TABLE
   ITEM 2: TIN PLATED

| PLATING ITEM 1 | PART-NO. |
|---|---|
| 8µ" HARD GOLD OVER min. 50µ" NICKEL | 131A13060X |
| 30µ" HARD GOLD OVER min. 50µ" NICKEL | 131C13060X |

Directive 2002/95/EC RoHS compliant

THIS DRAWING MAY NOT BE COPIED OR REPRODUCED IN ANY WAY, AND MAY NOT BE PASSED ON TO A THIRD PARTY WITHOUT WRITTEN PERMISSION. OWNERSHIP AND COPYRIGHT OF CONEC GmbH

DO NOT ALTER CAD DRAWING BY HAND

| rev. | description | date | name |
|---|---|---|---|
| a | Original | | |

tolerance — dim. in mm

| | date | name |
|---|---|---|
| drawn | 22.06.2004 | Schmidt |
| appd. | 22.06.2004 | Mickenbecker |
| norm | | |
| d-old | | |

CONEC®

scale: 5:1
material: SEE NOTES

title:
HIGH POWER CONTACT MALE
SOLDER PIN 90°, Ø 2,85 , 20A
D-SUB COMBINATION

dwg no: 13K1A1155
DIN-A4
sh: 1

part no: SEE TABLE